Main catalog 2022/2023

Perfect technology for highest demands

Connecting past, present and future.

wisigroup.com

The WISI Group

Committed to innovation.

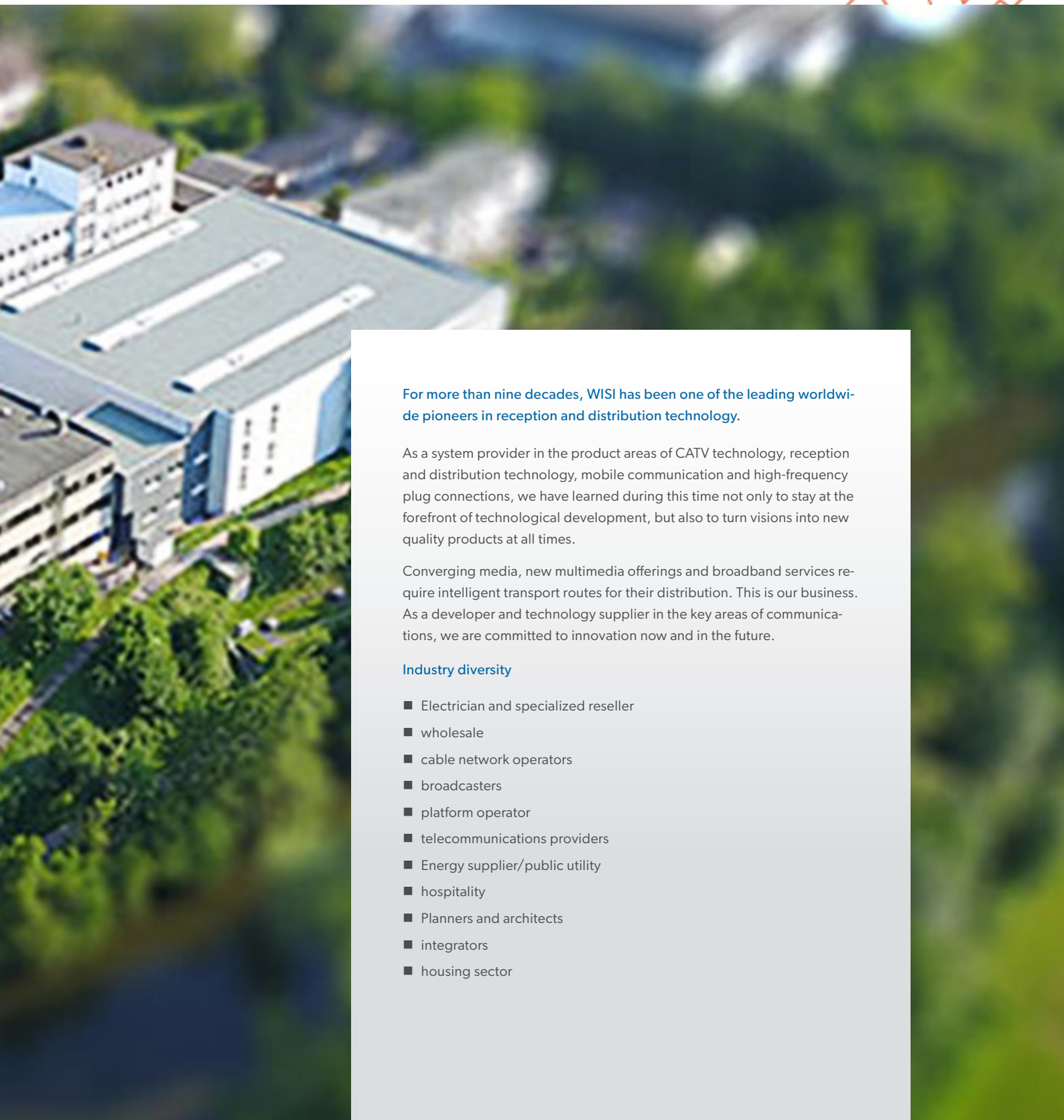

For more than nine decades, WISI has been one of the leading worldwide pioneers in reception and distribution technology.

As a system provider in the product areas of CATV technology, reception and distribution technology, mobile communication and high-frequency plug connections, we have learned during this time not only to stay at the forefront of technological development, but also to turn visions into new quality products at all times.

Converging media, new multimedia offerings and broadband services require intelligent transport routes for their distribution. This is our business. As a developer and technology supplier in the key areas of communications, we are committed to innovation now and in the future.

Industry diversity

- Electrician and specialized reseller
- wholesale
- cable network operators
- broadcasters
- platform operator
- telecommunications providers
- Energy supplier/public utility
- hospitality
- Planners and architects
- integrators
- housing sector

Table of contents

Terrestrial antennas

UHF antennas
EE 06 A 17
EB 457 LTE 17
EB 677 LTE 17
EZ 457 LTE 17

FM antennas
UE 01 18
UD 23 18

Mechanical accessories

Mast accessories
NB 10 20
NC 10 20
NC 11 20
NC 85 B 20
NC 91 A 20
NC 95 A 21
NG 60 21
NC 03 21

Wall bracket
MN 03 22
MN 08 A 22
MN 09 A 22
MN 10 A 22
MN 11 A 22

Rafter fastener
MN 90 A 23

Mast tube
MN 17 B 23
MN 60 A 0300 23

HIPER ANTENA

Electric accessories

Taps/Splitters
Input splitter
DM 34 C....25
DM 35 C....25
DM 36 A 4020....26

Tap BK 1.3 GHz
DM 61 A 0006....27
DM 61 A 0008....27
DM 61 A 0010....27
DM 61 A 0012....28
DM 61 A 0016....28
DM 61 A 0020....28
DM 62 A 0008....29
DM 62 A 0010....29
DM 62 A 0012....29
DM 62 A 0016....30
DM 62 A 0020....30
DM 63 A 0016....30
DM 64 A 0012....31
DM 64 A 0016....31
DM 64 A 0020....31
DM 64 A 0024....31
DM 64 A 1316....32
DM 66 A 1318....32
DM 68 A 1320....32

Tap SAT
DM 51 1010....33
DM 51 1015....33
DM 51 1020....33
DM 52 2010....33
DM 52 2015....33
DM 52 2020....33
DM 54 A 4010....34
DM 54 A 4015....34
DM 54 A 4020....34
DM 54 A 4025....34

Splitter BK 1 GHz
DM 02 B....35
DM 03 B....35
DM 04 B....35
DM 06 B....35
DM 08 B....35

Splitter BK 1.3 GHz
DM 02 D....36
DM 03 D....36
DM 04 D....37
DM 06 D....37
DM 08 D....37

Splitter SAT
DM 12 A....38
DM 13 A....38
DM 14 A....38
DM 16 B....38

Splitter SAT-RF
DM 50....39
DM 90....39

Grounding accessories
NB 02 F....40
NB 04 F....40
NB 05....40
NB 09....40

Tools
DZ 01....41
DZ 14....41
DZ 15 2130....41
DZ 85....42
MZ 01....42

Connector
75 Ohm Termination resistor
DV 24....43
DV 25....43

F-plug connector
DV 50....43
DV 54....43
DV 55....43

F-Crimp plug
DV 85....44
DV 90....44
DV 95....44
DV 97....44

F-Compression connector
DV 14 N....44
DV 15 N....44
DV 10 N....45
DV 15....45

IEC-plug / terminating resistor
DV 07 0397....45
DV 75....45

Adapter
DV 49 A....46
DV 52....46
DV 53....46

Connector
DV 45....46
DV 46 HQ....46

Cable end plug
ZE 10 1200....47
ZE 11 1200....47
ZE 12 1200....47
ZE 13 1200....47
ZE 15 1200....48
ZE 16 1200....48
ZG 22 1200....49
ZK 10 1200....49
ZR 10 1200....49

Wall outlet sockets
Universal Antenna Sockets
DB 03 A....50
DB 05....50
DB 07....50

Wall outlet sockets TERR/BK
DB 10 1006....51

Multimedia wall outlet sockets, individual
DD 04 M 0650....52

Multimedia wall outlet sockets, loop-through
DD 11 M 0650....53
DD 15 M 0650....53
DD 19 M 0650....53
DD 23 M 0650....53
DD 15 HP....54

Multimedia wall outlet sockets, terminal socket
DD 09 M 0650....55

Wall-outlet sockets SAT
DB 53....56
DB 54....57
DB 64....58

Accessories Wall-outlet sockets
DV 23....59
DV 27....59
DW 42....59
DW 44....59
DW 45....60
DW 45 T....59
DW 49 M....60
DW 49 T....60
DD 99....60
DW 41....60

DC blocker
DL 05....61
DL 20 C....61
DL 70....61
DL 72....61

HIBER ANTENNA

Table of contents

Electric accessories

Connection Cable
BK-Patch cable
BK 76 0035 62
BK 76 0045 62
BK 96 0030 62

Connection cable
DS 35 0035 63
DS 35 0050 63
DS 37 U 0150 64
DS 37 U 0300 64
DS 37 U 0500 64
DS 38 U 0150 65
DS 38 U 0300 65
DS 38 U 0500 65
DS 39 U 0150 66
DS 39 U 0300 66
DS 39 U 0500 66
DS 50 U 0150 67
DS 50 U 0300 67
DS 50 U 0500 67

Coaxial cables

Wet room cable
MK 15 0500 69

Installation cable
MK 76 A 0100 70
MK 76 A 0101 71
MK 76 A 0500 72
MK 86 B 0101 73
MK 86 B 0250 74
MK 96 A 0100 75
MK 96 A 0101 76
MK 96 A 0250 77
MK 96 A 0252 78
MK 96 A 0500 79
MK 99 S 0102 80
MK 99 S 0252 81
MK 99 S 0500 82

Halogen-free cable
MK 96 AL 100 83
MK 96 AL 252 84
MK 96 AL 500 85

HIPER ANTENA

Satellite reception systems

Satellite receiving systems
Parabol offset antennas
OA 10 A....87
OA 13 A....87
OA 85 G....88
OA 85 H....88
OA 85 I....88
OA 36 G....89
OA 36 H....89
OA 36 I....89
OA 38 G....89
OA 38 H....89
OA 38 I....89

Feed systems
OC 01 E....90
OC 02 E....90
OC 04 E....90
OC 06 E....90

Accessories parabol offset antennas
OF 85 0002....91
OF 85 0004....91

Multiswitch Proswitch
Surge protector
DL 400....93

Multiswitch 5 inputs, cascade
DY 0508....94
DY 0516....95

Multiswitch 9 inputs, cascade
DY 0908....96
DY 0916....97

Multiswitch 17 inputs, cascade
DY 1708....98
DY 1716....99

Amplifiers
DY 40....100

Splitter SAT RF
DM 50....101
DM 90....101

Accessories
DY 70....101

Multiswitch Flexswitch
Multiswitch 5 inputs, stand alone
DRS 0508....103
DRS 0512....104
DRS 0516....105
DRS 0524....106
DRS 0532....107

Multiswitch 5 inputs, receiver powered
DRR 0508....108
DRR 0516....109

Multiswitch 5 inputs, cascade
DRC 0508....110
DRC 0512....111
DRC 0516....112
DRC 0524....113
DRC 0532....114

Multiswitch 9 inputs, cascade
DRC 0908....115
DRC 0912....116
DRC 0916....117
DRC 0924....118
DRC 0932....119

Multiswitch 13 inputs, cascade
DRC 1308....120
DRC 1312....121
DRC 1316....122
DRC 1324....123
DRC 1332....124

HIPER ANTENA

Table of contents

Satellite reception systems

Multiswitch Flexswitch
Multiswitch 17 inputs, cascade
DRC 1708 125
DRC 1712..... 126
DRC 1716..... 127
DRC 1724 128
DRC 1732 129

Amplifiers
DRA 0505..... 130
DRA 0909.....131
DRA 1313..... 132
DRA 1717..... 133

Splitter
DRX 5002 A 134
DRX 9002 135

Accessories
ODR 0508 136
DRP 1533..... 137

Optical Transmitter Kit
OL 16 1310..... 139

Optical taps
OL 92 0010.....140
OL 92 0020 140
OL 92 0030 140
OL 92 0040 140

Optical splitter
OL 91 0002..... 140
OL 91 0003..... 140
OL 91 0004..... 140
OL 91 0008.....141
OL 91 0016 141
OL 91 0032.....141

Optical converter
OL 21 0003..... 142
OL 22 0003 142

Optical cables
OL 95 1001 143
OL 95 1003..... 143
OL 95 1005..... 143
OL 95 1010 144
OL 95 1015 144
OL 95 1020..... 144
OL 95 1030..... 145
OL 95 1040..... 145
OL 95 1050..... 145
OL 95 1075..... 146
OL 95 1100 146
OL 95 1150 146
OL 95 1200..... 146
OL 95 2030 147
OL 95 2040 147
OL 95 2050 148
OL 95 2075 148
OL 95 2100..... 148
OL 95 2150..... 149
OL 95 2200 149
OL 95 4300 149

Optical multiswitch
OL 41 0008..... 150
OL 41 0016 151
OL 42 0008 152
OL 42 0016..... 153

Optical mounting accessoires
OL 51 0000..... 154
OL 55 0000 154
OL 57 0001..... 155
OL 57 0002 155
OL 57 0003 155
OL 82 0002 155
OL 82 0003 155
OL 82 0005 155
OL 82 0010..... 155
OL 93 0001..... 156
OL 93 0002 156
OL 94 0005 156
OL 94 0010..... 156
OL 94 0015..... 156
OLPS 0230 157
OL 95 0001..... 157

HIPER ANTENA

Program processing

Micro Headend
DVB-T/DVB-C Channel Processing
OM 10 0426 159
OM 10 0646 160
OM 10 0648 161
OM 11 0648..... 162
OM 20 064S..... 163

Compact Headend
Base units
OH 40 A..... 165
OH 50 A..... 166

Digital modules
OH 84..... 167
OH 85 H..... 168
OH 86 2 169
OH 88 H..... 170
OH 89 2 171

Input distribution panels
DC 28 4S0T 172

Output collector
DM 17 A 173

Mounting accessories
ZG 80.....173

HDMI Modulator
OE 01 174

Handset
OH 41 174

Amplifiers

Mini Line In-house distribution amplifier
VX 81 0S 176
VX 83 0S..... 176
VX 86 177
VX 87 178

Mini Line In-house distribution amplifier 4 outputs
VX 67 B..... 179

Midi Line In-house distribution amplifier
VX 12 K 4432 180

Home Line In-house distribution amplifier
VX 45 D 3830 181
VX 45 E..... 182

Value Line In-house distribution amplifier
VX 26 BH 60 A 183
VX 29 BH 60 A 184
VX 29 BH 80 A 185
VX 29 BH 82 A 186
VX 29 BL 80 A..... 187
VX 26 H..... 188
VX 26 M1 189
VX 29 H..... 190

Value Line accessories
XE 29 191
XE 54 A 191
XP 0000...XP 0020 191
XP BOX 01.....191

HIPER ANTENA

Table of contents

Amplifiers

Compact Line HFC amplifier
VX 52 B 192
VX 53 B 193
VX 56 B 194
VX 57 B..... 195

Compact Line accessories
XE 51 A..... 196
XE 51 B 196
XE 52 A 196
XE 52 B..... 196
XM 51 B 196
XM 53 B 196
XM 55 B 196
XM 56 B 196
XE 20 B 0650..... 197
XE 20 B 0850..... 197
LB 01 197
XE 50 B 0650..... 197
XE 50 B 0850..... 197
XE 50 B 2040..... 197
VX 50 B 0650..... 198
VX 50 B 2040..... 198
VX 58 B 198
VT 21..... 199
VT 51 A..... 199

Multiband amplifier
VS 35 PRO 200
VS 50 PRO 201

HIPER ANTENA

HIPER ANTENA

Content alphabetically

B

BK 76 0035 62
BK 76 0045 62
BK 96 0030 62

D

DB 03 A 50
DB 05 50
DB 07 50
DB 10 1006 51
DB 53 56
DB 54 57
DB 64 58
DC 28 4S0T 172
DD 04 M 0650 52
DD 09 M 0650 55
DD 11 M 0650 53
DD 15 HP 54
DD 15 M 0650 53
DD 19 M 0650 53
DD 23 M 0650 53
DD 99 60
DL 05 61
DL 20 C 61
DL 400 93
DL 70 61
DL 72 61
DM 02 B 35
DM 03 B 35
DM 04 B 35
DM 06 B 35
DM 08 B 35
DM 02 D 36
DM 03 D 36
DM 04 D 37
DM 06 D 37
DM 08 D 37
DM 12 A 38
DM 13 A 38
DM 14 A 38
DM 16 B 38
DM 17 A 173
DM 34 C 25
DM 35 C 25
DM 36 A 4020 26
DM 50 ..... 39/101
DM 51 1010 33
DM 51 1015 33
DM 51 1020 33
DM 52 2010 33
DM 52 2015 33
DM 52 2020 33
DM 54 A 4010 34
DM 54 A 4015 34
DM 54 A 4020 34
DM 54 A 4025 34
DM 61 A 0006 27
DM 61 A 0008 27
DM 61 A 0010 27
DM 61 A 0012 28
DM 61 A 0016 28
DM 61 A 0020 28
DM 62 A 0008 29
DM 62 A 0010 29
DM 62 A 0012 29
DM 62 A 0016 30
DM 62 A 0020 30
DM 63 A 0016 30
DM 64 A 0012 31
DM 64 A 0016 31
DM 64 A 0020 31
DM 64 A 0024 31
DM 64 A 1316 32
DM 66 A 1318 32
DM 68 A 1320 32
DM 90 ..... 39/101
DRA 0505 130
DRA 0909 131
DRA 1313 132
DRA 1717 133
DRC 0508 110
DRC 0512 111
DRC 0516 112
DRC 0524 113
DRC 0532 114
DRC 0908 115
DRC 0912 116
DRC 0916 117
DRC 0924 118
DRC 0932 119
DRC 1308 120
DRC 1312 121
DRC 1316 122
DRC 1324 123
DRC 1332 124
DRC 1708 125
DRC 1712 126
DRC 1716 127
DRC 1724 128
DRC 1732 129
DRP 1533 137
DRR 0508 108
DRR 0516 109
DRS 0508 103
DRS 0512 104
DRS 0516 105
DRS 0524 106
DRS 0532 107
DRX 5002 A 134
DRX 9002 135
DS 35 0035 63
DS 35 0050 63
DS 37 U 0150 64
DS 37 U 0300 64
DS 37 U 0500 64
DS 38 U 0150 65
DS 38 U 0300 65
DS 38 U 0500 65
DS 39 U 0150 66
DS 39 U 0300 66
DS 39 U 0500 66
DS 50 U 0150 67
DS 50 U 0300 67
DS 50 U 0500 67
DV 07 0397 45
DV 10 N 45
DV 14 N 44
DV 15 45
DV 15 N 44
DV 23 59
DV 24 43
DV 25 43
DV 27 59
DV 45 46
DV 46 HQ 46
DV 49 A 46
DV 50 43
DV 52 46
DV 53 46
DV 54 43
DV 55 43
DV 75 45
DV 85 44
DV 90 44
DV 95 44
DV 97 44
DW 41 60
DW 42 59
DW 44 59
DW 45 60
DW 45 T 59
DW 49 M 60
DW 49 T 60
DY 0508 94
DY 0516 95
DY 0908 96
DY 0916 97
DY 1708 98
DY 1716 99
DY 40 100
DY 70 101
DZ 01 41
DZ 14 41
DZ 15 2130 41
DZ 85 42

E

EB 457 LTE 17
EB 677 LTE 17
EE 06 A 17
EZ 457 LTE 17

L

LB 01 197

M

MK 15 0500 69
MK 76 A 0100 70
MK 76 A 0101 71
MK 76 A 0500 72
MK 86 B 0101 73
MK 86 B 0250 74
MK 96 A 0100 75
MK 96 A 0101 76
MK 96 A 0250 77
MK 96 A 0252 78
MK 96 A 0500 79
MK 96 AL 100 83
MK 96 AL 252 84
MK 96 AL 500 85
MK 99 S 0102 80
MK 99 S 0252 81
MK 99 S 0500 82
MN 03 22
MN 08 A 22
MN 09 A 22
MN 10 A 22
MN 11 A 22
MN 17 B 23
MN 60 A 0300 23
MN 90 A 23
MZ 01 42

N

NB 02 F 40
NB 04 F 40
NB 05 40
NB 09 40
NB 10 20
NC 03 21
NC 10 20
NC 11 20
NC 85 B 20
NC 91 A 20
NC 95 A 21
NG 60 21

O

OA 10 A 87
OA 13 A 87
OA 36 G 89
OA 36 H 89
OA 36 I 89
OA 38 G 89
OA 38 H 89
OA 38 I 89
OA 85 G 88
OA 85 H 88

HIPER ANTENA

OA 85 I....88
OC 01 E....90
OC 02 E....90
OC 04 E....90
OC 06 E....90
OE 01....174
ODR 0508....136
OF 85 0002....91
OF 85 0004....91
OH 40 A....165
OH 41....174
OH 50 A....166
OH 84....167
OH 85 H....168
OH 86 2....169
OH 88 H....170
OH 89 2....171
OL 16 1310....139
OL 21 0003....142
OL 22 0003....142
OL 41 0008....150
OL 41 0016....151
OL 42 0008....152
OL 42 0016....153
OL 51 0000....154
OL 55 0000....154
OL 57 0001....155
OL 57 0002....155
OL 57 0003....155
OL 82 0002....155
OL 82 0003....155
OL 82 0005....155
OL 82 0010....155
OL 91 0002....140
OL 91 0003....140
OL 91 0004....140
OL 91 0008....141
OL 91 0016....141
OL 91 0032....141
OL 92 0010....140
OL 92 0020....140
OL 92 0030....140
OL 92 0040....140
OL 93 0001....156
OL 93 0002....156
OL 94 0005....156
OL 94 0010....156
OL 94 0015....156
OL 95 0001....157
OL 95 1001....143
OL 95 1003....143
OL 95 1005....143
OL 95 1010....144
OL 95 1015....144
OL 95 1020....144
OL 95 1030....145
OL 95 1040....145
OL 95 1050....145
OL 95 1075....146
OL 95 1100....146
OL 95 1150....146
OL 95 1200....146
OL 95 2030....147
OL 95 2040....147
OL 95 2050....148
OL 95 2075....148
OL 95 2100....148
OL 95 2150....149
OL 95 2200....149
OL 95 4300....149
OLPS 0230....157
OM 10 0426....159
OM 10 0646....160
OM 10 0648....161
OM 11 0648....162
OM 20 064S....163

U

UD 23....18
UE 01....18

V

VS 35 PRO....200
VS 50 PRO....201
VT 21....199
VT 51 A....199
VX 12 K 4432....180
VX 26 BH 60A....183
VX 29 BH 60A....184
VX 29 BH 80A....185
VX 29 BH 82A....186
VX 29 BL 80A....187
VX 26 H....188
VX 26 M1....189
VX 29 H....190
VX 45 D 3830....181
VX 45 E....182
VX 50 B 0650....198
VX 50 B 2040....198
VX 52 B....192
VX 53 B....193
VX 56 B....194
VX 57 B....195
VX 58 B....198
VX 67 B....179
VX 81 0S....176
VX 83 0S....176
VX 86....177
VX 87....178

X

XE 20 B 0650....197
XE 20 B 0850....197
XE 29....191
XE 50 B 0650....197
XE 50 B 0850....197
XE 50 B 2040....197
XE 51 A....196
XE 51 B....196
XE 52 A....196
XE 52 B....196
XE 54 A....191
XM 51 B....196
XM 53 B....196
XM 55 B....196
XM 56 B....196
XP 0000...XP 0020....191
XP BOX 01....191

Z

ZE 10 1200....47
ZE 11 1200....47
ZE 12 1200....47
ZE 13 1200....47
ZE 15 1200....48
ZE 16 1200....48
ZG 22 1200....49
ZG 80....173
ZK 10 1200....49
ZR 10 1200....49

LIPER ANTENA

More product platforms from WISI

Channel processing TANGRAM

TANGRAM

Maximum performance with minimum footprint

TANGRAM DVB-IP Gateway and Edge Solutions

The **TANGRAM platform** is a professional and especially flexible DVB compliant signal processing and distribution platform in a compact 1 height unit design. The headend is used for the playout of analogue and digital TV/radio content and feed into various access networks such as HFC, IP or FTTx.

At a glance

- Excellent price-performance ratio due to highest density and low power consumption
- Very high reliability due to fully redundant Concept and operationally interchangeable fans & power supplies
- Great versatility for building up your promising TV network: IP, DVB-C, ASI, DVB-T/T2/S/S2, DVB-T2-MI, PAL, NTSC, SECAM, FM, ISDB-T, ATSC

Channel processing Chameleon

CHAMELEON

A Single Hardware Multi Software Headend

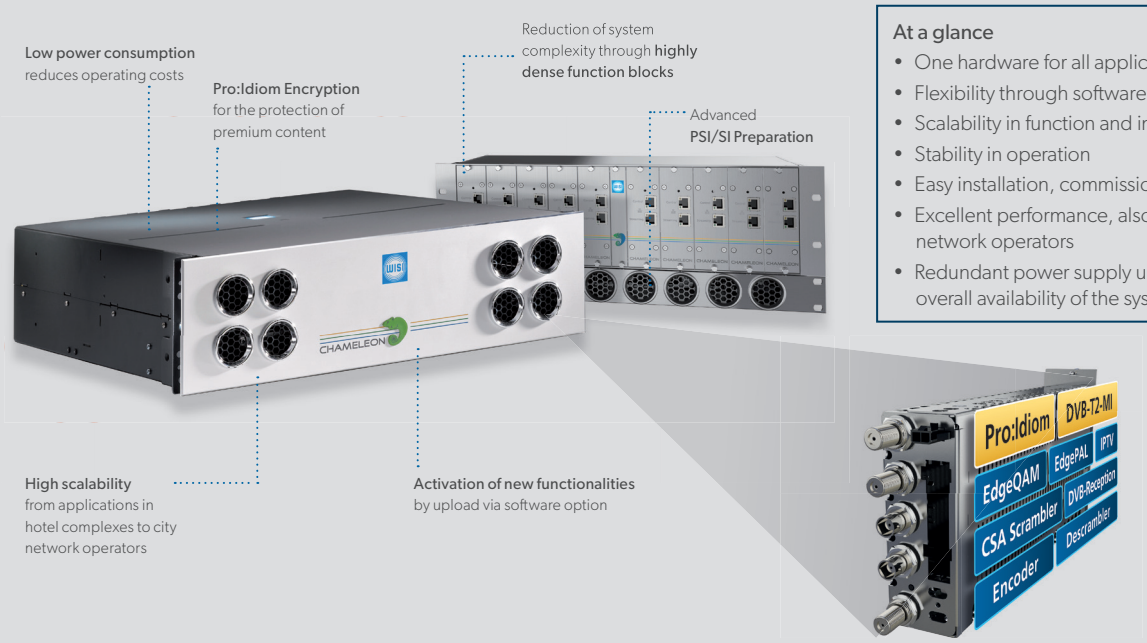

Software-based headend solution

WISI Chameleon is an extremely flexible headend that requires only one type of module. The integrated modules can change their function as required. They are suitable for all current and future applications and are ideally suited for the transition from the analog to the digital world as well as for feeding into HFC and IP distribution platforms.

At a glance

- One hardware for all applications
- Flexibility through software applications
- Scalability in function and installation size
- Stability in operation
- Easy installation, commissioning and operation
- Excellent performance, also suitable for large network operators
- Redundant power supply units guarantee the overall availability of the system

Optical transmission platform Optopus

OPTOPUS

Optical platform for HFC and FTTx

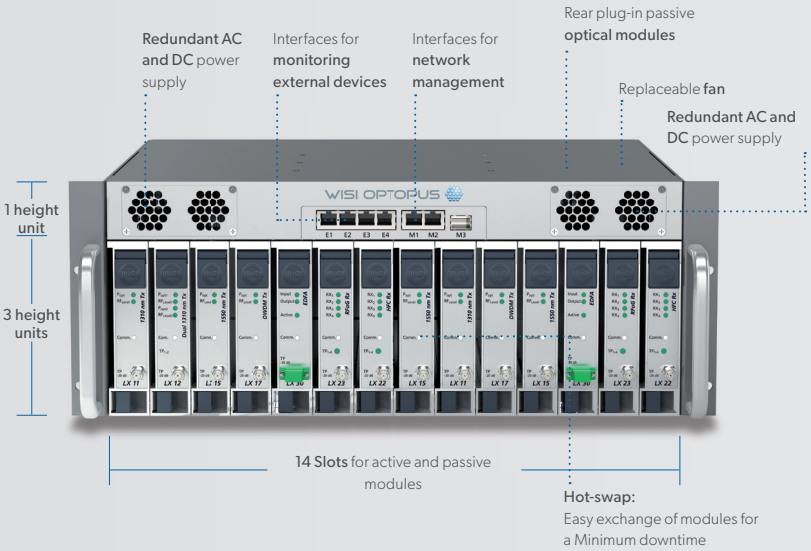

The Optopus transmission system from WISI is a flexible platform with a very high port density for all optical transmission applications in broadband networks. The system can be used in all network types such as HFC, RF over Glass (RFoG), RF Overlay and FTTx.

Optopus was developed to meet the high demands of today's transmission networks. Features such as redundant power supplies, hot-swappable ventilation units and advanced network management meet all the requirements of a professional network operator.

The Optopus platform offers a maximum of flexibility for the realization of the desired application with a wide range of plug-in modules.

14 slots in 3+1 height units (HE) are possible, for example, with up to 28 optical transmitters, 56 return path receivers and in mix.

At a glance

- Fully modular concept
- Reduced maintenance effort due to module replacement during operation
- „Backplates" reduce interruption times
- Extended module service life due to dust-free Cooling without fan in the module
- Easy installation and operation
- Integrated WDM filters in the modules
- Redundant power supply units guarantee high overall Availability of the system

IP Video platform Inca 4440

Intelligent Video Broadcasting-Plattform

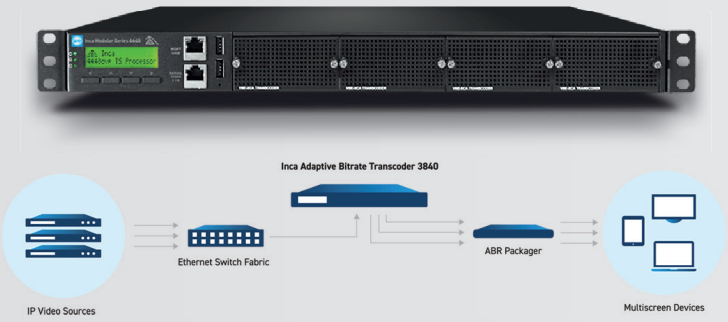

What is intelligent video broadcasting?

Inca's intelligent video transmission concept is an affordable, reliable and feature-rich software architecture integrated into every Inca product. The concept characterizes the intelligence of the products and the possibility of deep insights into every step of the process chain.

When feeding or outputting video signals to the Inca products, video thumbnails of all signals, stream downloads, payload analysis and alarms are generated. With a single click, you can download sample video for offline analysis. All the information you need is just a click away and is presented in real time, in a graphically-appealing web-based interface that is both powerful and very user-friendly.

At a glance

- Linear transcoding of MPEG-2, MPEG-4 and HEVC signals
- Most cost-effective ABR transcoding per transport stream
- Modular and flexible chassis with less than 200W consumption
- Reception of 8VSB, ASI, IP, SRT, MPEG-DASH signals
- IP transmission in UDP, HLS or SRT format
- Automatic reserve switching for power supplies, modules and signal sources

You will find these and other interesting products for implementing your individual reception and distribution solution in the **WISI online catalogue** and the **WISI product brochures.**

Terrestrial antennas

WISI terrestrial antennas:
Regional on reception

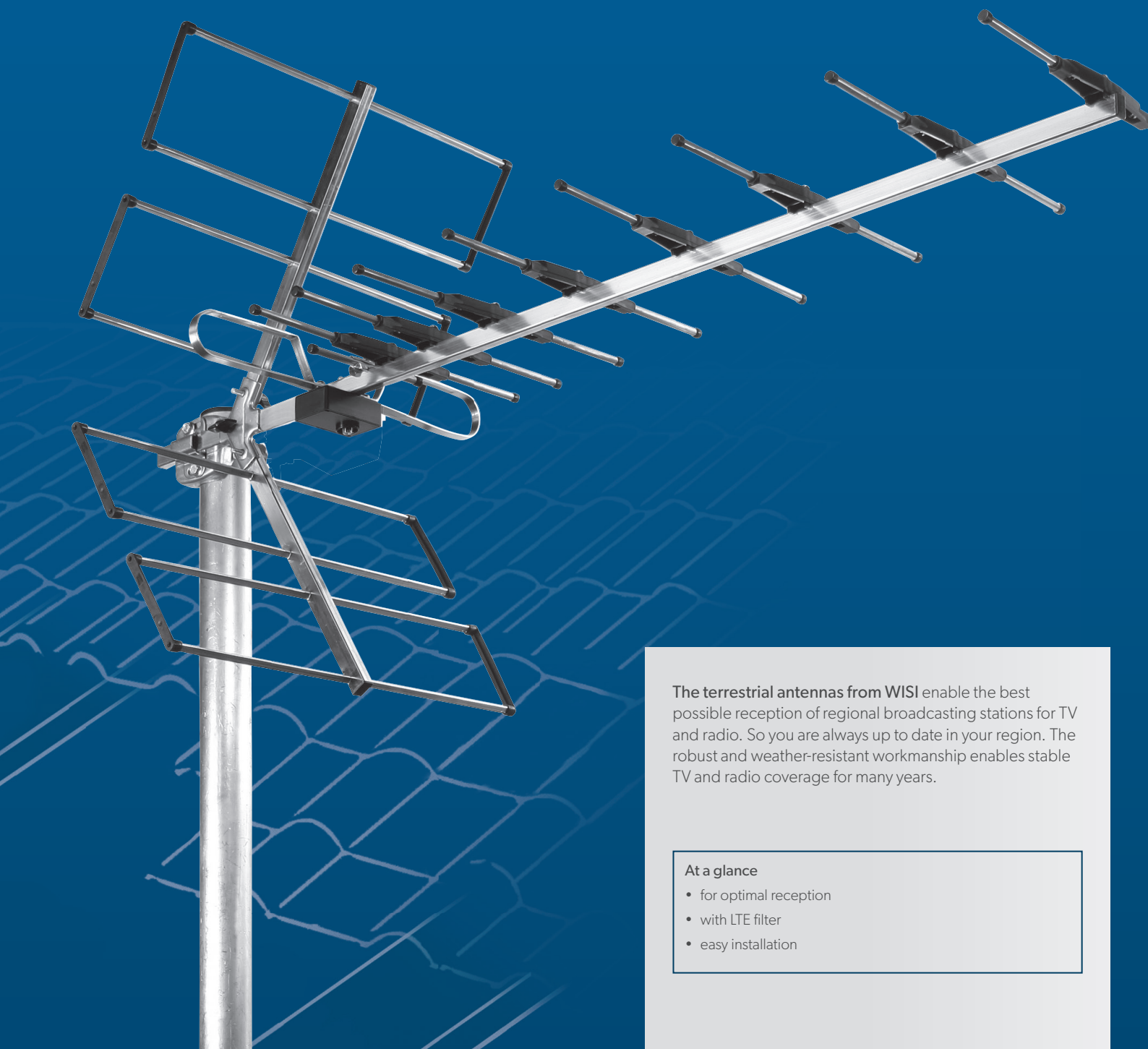

The terrestrial antennas from WISI enable the best possible reception of regional broadcasting stations for TV and radio. So you are always up to date in your region. The robust and weather-resistant workmanship enables stable TV and radio coverage for many years.

At a glance

- for optimal reception
- with LTE filter
- easy installation

UHF antennas

EE 06 A

UHF antenna, ch. 21...48

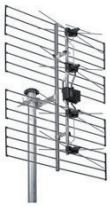

Technical Data	
Channels	21...48 (UHF)
Frequency range UHF	470...694 MHz
Polarization	horizontal/vertikal
Gain	14.5 dB (max.)
Rejection	25 dB (up 730 MHz)
Forward/backward ratio	>25 dB
Aperture angle horizontal	46 °
Aperture angle vertikal	27 °
Wind load horizontal	107 N
Wind load vertical	107 N
Connectors	
F-female	1 pcs.
General data	
Dimensions (width x height x depth)	645 x 830 x 260 mm

EB 457 LTE

UHF antenna, ch. 21...48, with LTE filter

Technical Data	
Channels	21...48 (UHF, with LTE filter)
Frequency range UHF	470...690 MHz
Rejection range	730...862 MHz
Rejection	25 dB (up 730 MHz)
Polarization	Horizontal
Elements	28 pcs.
Gain	13 dB
Forward/backward ratio	>20 dB
Aperture angle horizontal	40 °
Aperture angle vertikal	48 °
Wind load horizontal	32 N
Wind load vertical	43 N
Connectors	
F-female	1 pcs.
General data	
Length	1040 mm

EB 677 LTE

UHF antenna, ch. 21...48, with LTE filter

Technical Data	
Channels	21...48 (UHF, with LTE filter)
Frequency range UHF	470...690 MHz
Rejection range	730...862 MHz
Rejection	25 dB (up 730 MHz)
Polarization	Horizontal
Elements	41 pcs.
Gain	15.5 dB
Forward/backward ratio	>26 dB
Aperture angle horizontal	29 °
Aperture angle vertikal	34 °
Wind load horizontal	34 N
Wind load vertical	62 N
Connectors	
F-female	1 pcs.
General data	
Length	1960 mm

EZ 457 LTE

UHF antenna, ch. 21...48, with LTE filter

Technical Data	
Channels	21...48 (UHF, with LTE filter)
Frequency range UHF	470...690 MHz
Rejection range	730...862 MHz
Rejection	25 dB (up 730 MHz)
Polarization	Horizontal
Elements	38 pcs.
Gain	15 dB
Forward/backward ratio	>28 dB
Aperture angle horizontal	35 °
Aperture angle vertikal	42 °
Wind load horizontal	76 N
Wind load vertical	114 N
Connectors	
F-female	1 pcs.
General data	
Length	1140 mm

FM antennas

UE 01

UKW cross dipole antenna

characteristics

- VHF directional antenna for radio reception
- High antenna gain of 5 dB
- For mast diameters from 34...60 mm

Technical Data	
Channels	UKW (crossed dipole antenna)
Frequency range FM	87,5...108 MHz
Elements	2 pcs.
Gain	-3 dB (max.)
Forward/backward ratio	0 dB
Aperture angle horizontal	360 °
Wind load horizontal	22.1 N
Connectors	
F-female	1 pcs.
General data	
Length	- mm
Mast clamp diameter	34...60 mm

UD 23

FM/DAB combi antenna

Technical Data	
Reception range	FM/DAB/DAB+
Frequency range FM	87,5...108 MHz
Frequency range DAB/DAB+	174...240 MHz
Impedance	75 Ω
Elements	1 pcs.
Gain FM	max. 0 dB
Gain DAB/DAB+	max. 3 dB
Aperture angle horizontal	±180 °
Wind load at 150 km/h	14 N
Connectors	
F-female	2 pcs.
General data	
Dimensions (width x height x depth)	462 x 760 x 600 mm
Weight	0,75 kg
Material	Aluminium
Mast clamp diameter	30...60 mm

Mechanical accessories

WISI mechanical accessories:

Stable in any weather

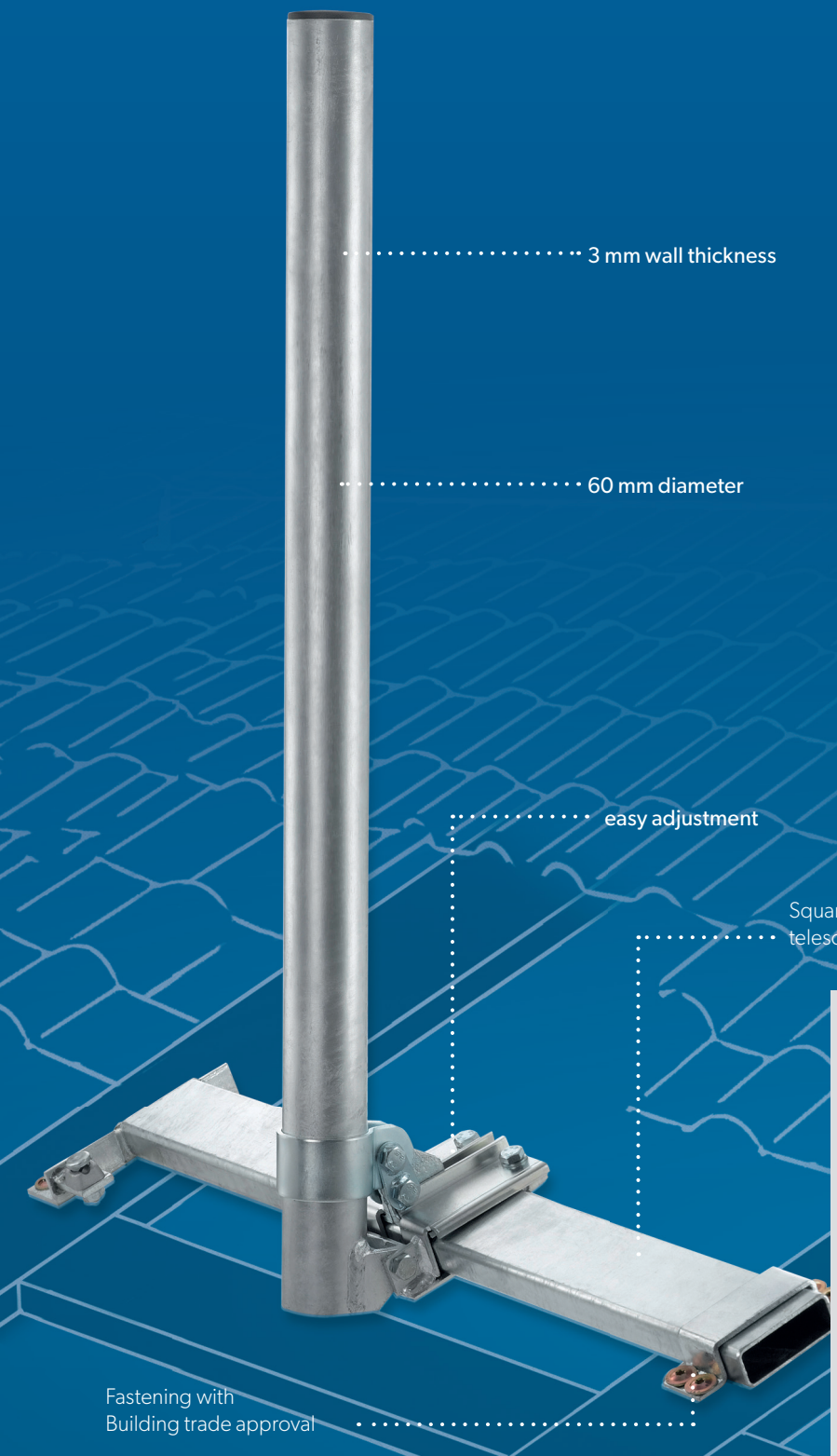

WISI offers the complete range of solutions for the installation of SAT reception systems. This ranges from simple sealing tape to highly stable and weather-resistant rafter brackets. So there is a suitable the right solution for every application.

At a glance

- also suitable for larger antenna diameters
- suitable for all tiled roofs
- easiest handling
- especially suitable for roofs with thermal insulation

Mast accessories

NB 10

Mast foot

Technical Data	
Material	Galvanized steel
Wall thickness	3 mm
Hole distance	76 mm
Hole diameter	9 mm
Dimensions (width x height x depth)	96 x 60 x 66 mm
For mast with Ø	60 mm (until)

NC 85 B

Roof hood

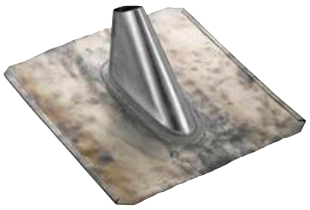

Technical Data	
Material	Die cast threading
Wall thickness	0.3 mm
Dimensions (width x height x depth)	385 x 150 x 420 mm
For mast with Ø	60 mm

NC 91 A

Sealing strip

Technical Data	
Material	Tightening tape. Not to be used when temperature below 5°C.
For mast with Ø	80 mm (until)

NC 10

Mast clamp till 45 mm

Technical Data	
Material	Steel
Hole diameter	9 mm
For mast with Ø	42...45 mm

NC 11

Mast clamp till 50 mm

Technical Data	
Material	Steel
Hole diameter	9 mm
For mast with Ø	46...50 mm

HIGER ANTENNA

Mast accessories

NC 95 A

Pole casing

Technical Data	
Material	plastic
For mast with Ø	44...48 mm

NC 03

Mast cap

Technical Data	
Material	weather-proof plastic
For mast with Ø	37...48 mm

NG 60

Mast fitting kit, 60 mm

Technical Data	
Included in the kit	Mast base, mast clamp, mast cap, roof hood, mast grommet, fastening screws, grounding strap
For mast with Ø	60 mm

HIPER ANTENA

Wall mounts

MN 08 A
Wall bracket

MN 09 A
Wall bracket

MN 10 A
Wall bracket

MN 11 A
Wall bracket

characteristics

- Angle wall bracket for parabolic antennas
- Tube diameter 50 mm
- Stable base plate with drawn tube mounting

Technical Data				
Material	Aluminium	Aluminium	Aluminium	Aluminium
Tube diameter	50 mm	50 mm	50 mm	50 mm
Tube length	250 mm	250 mm	250 mm	250 mm
Wall thickness baseplate	5 mm	5 mm	5 mm	5 mm
Wall distance	200 mm	500 mm	400 mm	300 mm
Base plate	150 x 150 mm	150 x 150 mm	150 x 150 mm	150 x 150 mm

MN 03
Wall bracket

characteristics

- Wall bracket for antenna mast tubes up to Ø 80 mm
- Secure hold due to serrated clamps
- Scope of delivery 1 pair

Technical Data	
Material	Steel hot galvanized, Top or bottom installation
Wall distance	220 mm
Hole distance	355 mm
Hole diameter	11 mm
For mast with Ø	80 mm (until)
bracket distance	300...400 mm

CAIPER ANTE

Roof rafter bracket

MN 90 A

Rafter fastener

Technical Data	
Material	Tubes: galvanized steel; clamp: diecast aluminum
Mast diameter	60 mm
Mast length	900 mm
Wall thickness	3 mm
Roof bar spacing	800 mm (max.)
Roof pitch	24...56 °
Bending force	1100 Nm

The MN 90 A is a rafter fastener. With its high bending moment from min 1100 Nm in all directions, it is the most stable holder on the market. A 100 cm antenna is possible. The mast tube's diameter is 60 mm and is suitable for a roof pitch of 25° to 56°. Thanks to 8 fixing elements with a certification for construction industry, there is no wobble at larger distances between the rafters (up to 800 mm). Thanks to a precise and stable orientation, powerful bidirectional Internet is guaranteed via satellite. The wall thickness is 3 mm and the height 90 mm.

characteristics

- Bending moment of min 1100Nm in all directions. Currently the strongest holder on the market. A 100 cm antenna is possible.
- mast tube with Ø 60 mm
- wall thickness 3 mm and a high from 90 cm
- 8x fastening element with construction approval
- for rafter spacing to 800 mm
- for roof pitch from 25-56°
- Precise and strong positioning for bi-directional and powerful Internet reception via satellite (e.g. for the systems Filiago, skyDSL, sat_speed).
- no wobbling with bigger rafter distances
- Rafter and between rafter solution.

Scope of delivery

- mast 90 cm
- mast clamping
- 4 screws 10 x 100 mm, SW 17
- 8 TORX- flat head screw 8x 120 mm
- installation instructions

Roof rafter bracket

MN 17 B

Telescopic mast

MN 60 A 0300

Mast tube

Technical Data		
Material	Steel hot galvanized, guide groove	Steel hot galvanized, EN ISO 1461
Mast diameter	48 mm	60 mm
Mast length	2000 mm	3000 mm
Wall thickness	2 mm	3 mm
Bending force	1650 Nm (max.)	1100 Nm
Weight	4,8 kg	8,55 kg

SUPER ANTENNA

Electrical accessories

WISI electrical accessories:

Always the perfect connection.

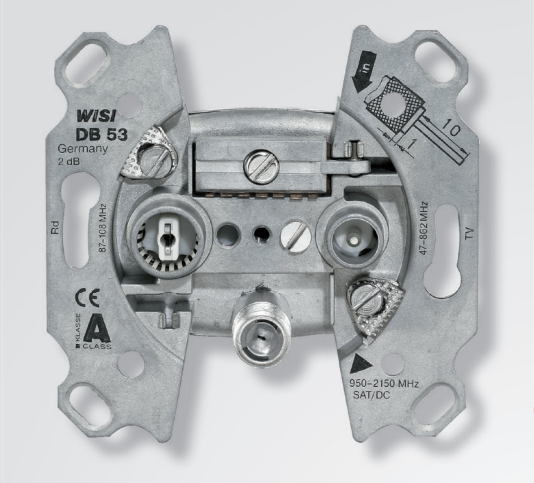

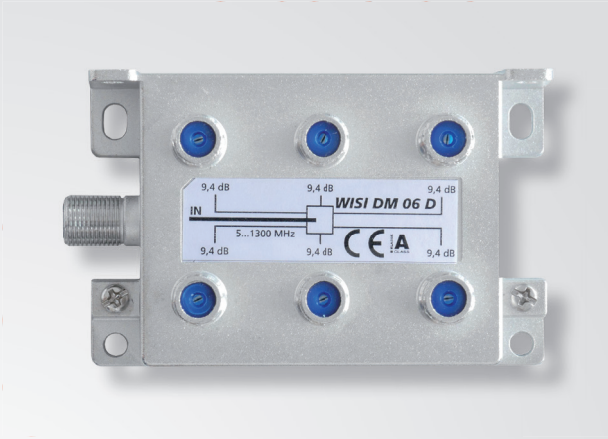

WISI cables, plugs and sockets are perfectly matched to each other so that they achieve consistently high shielding. They are quick and easy to install, have excellent performance characteristics.

The WISI connectors are characterised by a very high manufacturing quality, which not only has a positive effect on the signal quality and low power losses, but also on the simple assembly. WISI also offers the necessary tools for this. Thanks to the adapters in our range, there is hardly a coaxial connector that cannot be realized with WISI connectors. The WISI system gives you maximum flexibility.

At a glance

- suitable for all cable types
- high-grade workmanship
- easy handling

Tap BK 1 GHz

DM 34 C

Two-way tap, 16 dB

Technical Data	
Frequency range	5...1006 MHz
Through loss	0,8...1,2 dB
TAP loss	16 dB
Directional attenuation	≥35/≥28 dB (5...470/470...1000 MHz)
Isolation	≥34 dB
Return loss	18...22 dB
Connectors	
F-female	4 pcs. (1x input, 1x run through, 2x branch)
General data	
Screening factor	>85 dB (class A)
DC Bypass IN/OUT 1A/30V	No
Dimensions (width x height x depth)	78 x 50 x 27 mm

characteristics

- Frequency range 5...1000 MHz
- Screening factor according to Class A
- High port isolation and return loss

DM 35 C

Two-way tap, 20 dB

Technical Data	
Frequency range	5...1006 MHz
Through loss	0,5...1,0 dB
TAP loss	20 dB
Directional attenuation	≥45/≥32 dB (5...470/470...1000 MHz)
Isolation	≥34 dB
Return loss	18...22 dB
Connectors	
F-female	4 pcs. (1x input, 1x run through, 2x branch)
General data	
Screening factor	>85 dB (class A)
DC Bypass IN/OUT 1A/30V	No
Dimensions (width x height x depth)	78 x 50 x 27 mm

characteristics

- Frequency range 5...1000 MHz
- Screening factor according to Class A
- High port isolation and return loss

HIPER

Tap BK 1 GHz

DM 36 A 4020

Four-way tap, 20 dB

Technical Data	
Frequency range	5...1006 MHz
Through loss	1 +/- 0.2 dB
TAP loss	20 +/- 1.0 dB
Directional attenuation	> 40 / > 33 dB (5...470/470...1000 MHz)
Isolation	> 32 / > 28 dB (5...470/470...1000 MHz)
Return loss	> 22 dB
Connectors	
F-female	6 pcs. (1x input, 1x run through, 4x branch)
General data	
Screening factor	>85 dB (class A)
Dimensions (width x height x depth)	78 x 58 x 28 mm

characteristics

- Frequency range 5...1000 MHz
- Screening factor according to Class A
- High port isolation and return loss

HIPER ANTENA

Tap BK 1.3 GHz

characteristics

- Frequency range from 5...1300 MHz (DOCSIS 3.1 capable)
- Screening factor according to Class A (+10 dB)
- High intermodulation suppression
- Very high port isolation and return loss
- Approved by Vodafone Kabel Deutschland

DM 61 A 0006

TAP symmetrical 1,3 GHz, 1-way, 6 dB

KLASSE A CLASS

DM 61 A 0008

TAP symmetrical 1,3 GHz, 1-way, 8 dB

KLASSE A CLASS

DM 61 A 0010

TAP symmetrical 1,3 GHz, 1-way, 10 dB

KLASSE A CLASS

Technical Data			
Frequency range	5...1300 MHz	5...1300 MHz	5...1300 MHz
Through loss			
5...65 MHz	2,2 dB (±0,5 dB)	1,5 dB (±0,3 dB)	1,2 dB (±0,3 dB)
65...470 MHz	2,2 dB (±0,5 dB)	1,5 dB (±0,3 dB)	1,2 dB (±0,3 dB)
470...862 MHz	2,4 dB (±0,5 dB)	1,8 dB (±0,3 dB)	1,4 dB (±0,5 dB)
862...1006 MHz	2,5 dB (±0,5 dB)	2,0 dB (±0,5 dB)	1,6 dB (±0,5 dB)
1006...1300 MHz	3,0 dB (±0,8 dB)	2,2 dB (±0,5 dB)	1,8 dB (±0,5 dB)
TAP loss			
5...65 MHz	6,0 dB (±1,5 dB)	8,0 dB (±1,5 dB)	10,0 dB (±1,0 dB)
65...470 MHz	6,0 dB (±1,0 dB)	8,0 dB (±1,0 dB)	10,0 dB (±1,0 dB)
470...862 MHz	6,0 dB (±1,0 dB)	8,0 dB (±1,0 dB)	10,0 dB (±1,0 dB)
862...1006 MHz	6,0 dB (±1,0 dB)	8,0 dB (±1,0 dB)	10,0 dB (±1,0 dB)
1006...1300 MHz	6,0 dB (±1,5 dB)	8,0 dB (±1,5 dB)	10,0 dB (±1,0 dB)
Isolation			
5...65 MHz	>24,0 dB	>24,0 dB	>25,0 dB
65...470 MHz	>25,0 dB	>30,0 dB	>30,0 dB
470...862 MHz	>22,0 dB	>26,0 dB	>22,0 dB
862...1006 MHz	>22,0 dB	>22,0 dB	>22,0 dB
1006...1300 MHz	>20,0 dB	>20,0 dB	>20,0 dB
Return loss			
5...65 MHz	>22,0 dB	>22,0 dB	>22,0 dB
65...470 MHz	>20,0 dB	>20,0 dB	>20,0 dB
470...862 MHz	>18,0 dB	>18,0 dB	>18,0 dB
862...1006 MHz	>18,0 dB	>18,0 dB	>18,0 dB
1006...1300 MHz	>16,0 dB	>16,0 dB	>16,0 dB
Connectors			
F-female	3pcs.(1x Input, 1x Loop-through output, 1x TAP output)	3pcs.(1x Input, 1x Loop-through output, 1x TAP output)	3pcs.(1x Input, 1x Loop-through output, 1x TAP output)
General data			
Screening factor	Class A (+10 dB), according to EN 50083-2	Class A (+10 dB), according to EN 50083-2	Class A (+10 dB), according to EN 50083-2
Intermodulation ratio	120dBµVaccording to EN 60728-4	120dBµVaccording to EN 60728-4	120dBµVaccording to EN 60728-4
DC Bypass IN/OUT	No	No	No
Dimensions (width x height x depth)	mm	mm	mm

Tap BK 1.3 GHz

DM 61 A 0012

TAP symmetrical 1,3 GHz, 1-way, 12 dB

DM 61 A 0016

TAP symmetrical 1,3 GHz, 1-way, 16 dB

DM 61 A 0020

TAP symmetrical 1,3 GHz, 1-way, 20 dB

characteristics

- Frequency range from 5...1300 MHz (DOCSIS 3.1 capable)
- Screening factor according to Class A (+10 dB)
- High intermodulation suppression
- Very high port isolation and return loss
- Approved by Vodafone Kabel Deutschland

Technical Data			
Frequency range	5...1300 MHz	5...1300 MHz	5...1300 MHz
Through loss			
5...65 MHz	0,8 dB (±0,2 dB)	0,4 dB (±0,2 dB)	0,4 dB (±0,2 dB)
65...470 MHz	0,8 dB (±0,3 dB)	0,4 dB (±0,2 dB)	0,4 dB (±0,2 dB)
470...862 MHz	0,8 dB (±0,3 dB)	0,6 dB (±0,3 dB)	0,6 dB (±0,3 dB)
862...1006 MHz	1,0 dB (±0,5 dB)	0,8 dB (±0,5 dB)	0,8 dB (±0,3 dB)
1006...1300 MHz	1,5 dB (±0,8 dB)	1,0 dB (±0,8 dB)	0,8 dB (±0,5 dB)
TAP loss			
5...65 MHz	12,0 dB (±1,0 dB)	16,0 dB (±1,0 dB)	20,0 dB (±1,0 dB)
65...470 MHz	12,0 dB (±1,0 dB)	16,0 dB (±1,0 dB)	20,0 dB (±1,0 dB)
470...862 MHz	12,0 dB (±1,0 dB)	16,0 dB (±1,0 dB)	20,0 dB (±1,0 dB)
862...1006 MHz	12,0 dB (±1,0 dB)	16,0 dB (±1,0 dB)	20,0 dB (±1,0 dB)
1006...1300 MHz	12,0 dB (±1,0 dB)	16,0 dB (±1,0 dB)	20,0 dB (±1,0 dB)
Isolation			
5...65 MHz	>25,0 dB	>32,0 dB	>35,0 dB
65...470 MHz	>30,0 dB	>32,0 dB	>35,0 dB
470...862 MHz	>25,0 dB	>30,0 dB	>32,0 dB
862...1006 MHz	>24,0 dB	>28,0 dB	>30,0 dB
1006...1300 MHz	>22,0 dB	>25,0 dB	>26,0 dB
Return loss			
5...65 MHz	>22,0 dB	>22,0 dB	>22,0 dB
65...470 MHz	>20,0 dB	>20,0 dB	>20,0 dB
470...862 MHz	>18,0 dB	>18,0 dB	>18,0 dB
862...1006 MHz	>18,0 dB	>18,0 dB	>18,0 dB
1006...1300 MHz	>16,0 dB	>16,0 dB	>16,0 dB
Connectors			
F-female	3pcs.(1x Input, 1x Loop-through output, 1x TAP output)	3pcs.(1x Input, 1x Loop-through output, 1x TAP output)	3pcs.(1x Input, 1x Loop-through output, 1x TAP output)
General data			
Screening factor	Class A (+10 dB), according to EN 50083-2	Class A (+10 dB), according to EN 50083-2	Class A (+10 dB), according to EN 50083-2
Intermodulation ratio	120dBµVaccording to EN 60728-4	120dBµVaccording to EN 60728-4	120dBµVaccording to EN 60728-4
DC Bypass IN/OUT	No	No	No
Dimensions (width x height x depth)	mm	mm	mm

Tap BK 1.3 GHz

characteristics

- Frequency range from 5...1300 MHz (DOCSIS 3.1 capable)
- Screening factor according to Class A (+10 dB)
- High intermodulation suppression
- Very high port isolation and return loss
- Approved by Vodafone Kabel Deutschland

DM 62 A 0008

TAP symmetrical 1,3 GHz, 2-way, 8 dB

DM 62 A 0010

TAP symmetrical 1,3 GHz, 2-way, 10 dB

DM 62 A 0012

TAP symmetrical 1,3 GHz, 2-way, 12 dB

Technical Data			
Frequency range	5...1300 MHz	5...1300 MHz	5...1300 MHz
Through loss			
5...65 MHz	3,8 dB (±0,5 dB)	2,2 dB (±0,5 dB)	1,2 dB (±0,5 dB)
65...470 MHz	3,8 dB (±0,5 dB)	2,2 dB (±0,5 dB)	1,2 dB (±0,5 dB)
470...862 MHz	3,8 dB (±0,5 dB)	2,7 dB (±0,5 dB)	1,4 dB (±0,5 dB)
862...1006 MHz	3,8 dB (±0,5 dB)	2,8 dB (±0,5 dB)	1,8 dB (±0,5 dB)
1006...1300 MHz	4,0 dB (±0,8 dB)	3,5 dB (±0,8 dB)	2,2 dB (±0,8 dB)
TAP loss			
5...65 MHz	8,5 dB (±1,0 dB)	10,5 dB (±1,0 dB)	12,5 dB (±1,0 dB)
65...470 MHz	8,5 dB (±1,0 dB)	10,5 dB (±1,0 dB)	12,5 dB (±1,0 dB)
470...862 MHz	8,5 dB (±1,0 dB)	10,5 dB (±1,0 dB)	12,5 dB (±1,0 dB)
862...1006 MHz	8,5 dB (±1,0 dB)	10,5 dB (±1,0 dB)	12,5 dB (±1,0 dB)
1006...1300 MHz	8,5 dB (±1,0 dB)	10,5 dB (±1,0 dB)	12,5 dB (±1,0 dB)
Decoupling OUT-TAP			
5...65 MHz	>25,0 dB	>28,0 dB	>30,0 dB
65...470 MHz	>24,0 dB	>26,0 dB	>28,0 dB
470...862 MHz	>22,0 dB	>24,0 dB	>26,0 dB
862...1006 MHz	>20,0 dB	>22,0 dB	>24,0 dB
1006...1300 MHz	>20,0 dB	>20,0 dB	>22,0 dB
Decoupling TAP-TAP			
5...65 MHz	>36 dB	>36 dB	>36 dB
65...470 MHz	>34 dB	>36 dB	>36 dB
470...862 MHz	>32 dB	>32 dB	>32 dB
862...1006 MHz	>30 dB	>30 dB	>30 dB
1006...1300 MHz	>28 dB	>30 dB	>30 dB
Return loss			
5...65 MHz	>20,0dB	>22,0dB	>22,0dB
65...470 MHz	>20,0dB	>20,0dB	>20,0dB
470...862 MHz	>18,0dB	>18,0dB	>18,0dB
862...1006 MHz	>18,0dB	>18,0dB	>18,0dB
1006...1300 MHz	>16,0dB	>16,0dB	>16,0dB
Connectors			
F-female	4pcs.(1x Input, 1x Loop through output, 2x TAP output)	4pcs.(1x Input, 1x Loop through output, 2x TAP output)	4pcs.(1x Input, 1x Loop through output, 2x TAP output)
General data			
Screening factor	Class A (+10 dB), according to EN 50083-2	Class A (+10 dB), according to EN 50083-2	Class A (+10 dB), according to EN 50083-2
Intermodulation ratio	120 dBµV according to EN 60728-4	120 dBµV according to EN 60728-4	120 dBµV according to EN 60728-4
DC Bypass IN/OUT	No	No	No
Dimensions (width x height x depth)	71,8 x 25,5 x 49,5 mm	71,8 x 25,5 x 49,5 mm	71,8 x 25,5 x 49,5 mm

Tap BK 1.3 GHz

characteristics

- Frequency range from 5...1300 MHz (DOCSIS 3.1 capable)
- Screening factor according to Class A (+10 dB)
- High intermodulation suppression
- Very high port isolation and return loss
- Approved by Vodafone Kabel Deutschland

DM 62 A 0016

TAP symmetrical 1,3 GHz, 2-way, 16 dB

DM 62 A 0020

TAP symmetrical 1,3 GHz, 2-way, 20 dB

DM 63 A 0016

TAP symmetrical 1,3 GHz, 3-way, 16 dB

Technical Data	DM 62 A 0016	DM 62 A 0020	DM 63 A 0016
Frequency range	5...1300 MHz	5...1300 MHz	5...1300 MHz
Through loss			
5...65 MHz	1,0 dB (±0,5 dB)	0,8 dB (±0,3 dB)	1,6 dB (±0,5 dB)
65...470 MHz	1,0 dB (±0,5 dB)	0,8 dB (±0,3 dB)	1,6 dB (±0,3 dB)
470...862 MHz	1,2 dB (±0,5 dB)	1,0 dB (±0,3 dB)	1,6 dB (±0,3 dB)
862...1006 MHz	1,4 dB (±0,5 dB)	1,2 dB (±0,5 dB)	1,8 dB (±0,3 dB)
1006...1300 MHz	1,7 dB (±0,5 dB)	1,7 dB (±0,5 dB)	2,5 dB (±0,5 dB)
TAP loss			
5...65 MHz	16,5 dB (±1,0 dB)	20,0 dB (±1,0 dB)	16,5 dB (±1,0 dB)
65...470 MHz	16,5 dB (±1,0 dB)	20,0 dB (±1,0 dB)	16,5 dB (±1,0 dB)
470...862 MHz	16,5 dB (±1,0 dB)	20,0 dB (±1,0 dB)	16,5 dB (±1,0 dB)
862...1006 MHz	16,5 dB (±1,0 dB)	20,0 dB (±1,0 dB)	16,5 dB (±1,0 dB)
1006...1300 MHz	16,5 dB (±1,0 dB)	20,0 dB (±1,0 dB)	16,5 dB (±1,0 dB)
Decoupling OUT-TAP			
5...65 MHz	>32,0 dB	>35,0 dB	>30,0 dB
65...470 MHz	>32,0 dB	>36,0 dB	>28,0 dB
470...862 MHz	>30,0 dB	>34,0 dB	>26,0 dB
862...1006 MHz	>28,0 dB	>32,0 dB	>24,0 dB
1006...1300 MHz	>26,0 dB	>28,0 dB	>22,0 dB
Decoupling TAP-TAP			
5...65 MHz	>36 dB	>36 dB	>36 dB
65...470 MHz	>36 dB	>36 dB	>36 dB
470...862 MHz	>32 dB	>32 dB	>32 dB
862...1006 MHz	>30 dB	>30 dB	>30 dB
1006...1300 MHz	>30 dB	>30 dB	>30 dB
Return loss			
5...65 MHz	>22,0dB	>22,0dB	>22,0dB
65...470 MHz	>20,0dB	>20,0dB	>20,0dB
470...862 MHz	>18,0dB	>18,0dB	>18,0dB
862...1006 MHz	>18,0dB	>18,0dB	>18,0dB
1006...1300 MHz	>16,0dB	>16,0dB	>16,0dB
Connectors			
F-female	4pcs.(1x Input, 1x Loop through output, 2x TAP output)	4pcs.(1x Input, 1x Loop through output, 2x TAP output)	5pcs.(1x Input, 1x Loop through output, 3x TAP output)
General data			
Screening factor	Class A (+10 dB), according to EN 50083-2	Class A (+10 dB), according to EN 50083-2	Class A (+10 dB), according to EN 50083-2
Intermodulation ratio	120 dBµV according to EN 60728-4	120 dBµV according to EN 60728-4	120 dBµV according to EN 60728-4
DC Bypass IN/OUT	No	No	No
Dimensions (width x height x depth)	71,8 x 25,5 x 49,5 mm	71,8 x 25,5 x 49,5 mm	71,8 x 25,5 x 49,5 mm

Tap BK 1.3 GHz

characteristics

- Frequency range from 5...1300 MHz (DOCSIS 3.1 capable)
- Screening factor according to Class A (+10 dB)
- Very high port isolation and return loss

	DM 64 A 0012	DM 64 A 0016	DM 64 A 0020	DM 64 A 0024
	TAP symmetrical 1,3 GHz, 4-way, 12 dB	TAP symmetrical 1,3 GHz, 4-way, 16 dB	TAP symmetrical 1,3 GHz, 4-way, 20 dB	TAP symmetrical 1,3 GHz, 4-way, 24 dB
	KLASSE A CLASS	KLASSE A CLASS	KLASSE A CLASS	KLASSE A CLASS
Technical Data				
Frequency range	5...1300 MHz	5...1300 MHz	5...1300 MHz	5...1300 MHz
Through loss				
5...65 MHz	3,2 dB (±0,5 dB)	1,2 dB (±0,5 dB)	0,5 dB (±0,3 dB)	0,3 dB (±0,3 dB)
65...470 MHz	3,5 dB (±0,3 dB)	1,3 dB (±0,3 dB)	0,7 dB (±0,3 dB)	0,5 dB (±0,3 dB)
470...862 MHz	3,8 dB (±0,3 dB)	1,6 dB (±0,3 dB)	0,9 dB (±0,3 dB)	0,7 dB (±0,3 dB)
862...1006 MHz	4,0 dB (±0,3 dB)	1,8 dB (±0,3 dB)	1 dB (±0,3 dB)	0,8 dB (±0,3 dB)
1006...1300 MHz	4,5 dB (±0,5 dB)	2,2 dB (±0,5 dB)	1,2 dB (±0,5 dB)	1 dB (±0,5 dB)
TAP loss				
5...65 MHz	12 dB (±1,0 dB)	16 dB (±1,0 dB)	20 dB (±1,0 dB)	24 dB (±1,0 dB)
65...470 MHz	12 dB (±1,0 dB)	16 dB (±1,0 dB)	20 dB (±1,0 dB)	24 dB (±1,0 dB)
470...862 MHz	12 dB (±1,0 dB)	16 dB (±1,0 dB)	20 dB (±1,0 dB)	24 dB (±1,0 dB)
862...1006 MHz	12 dB (±1,0 dB)	16 dB (±1,0 dB)	20 dB (±1,0 dB)	24 dB (±1,0 dB)
1006...1300 MHz	12 dB (±1,0 dB)	16 dB (±1,0 dB)	20 dB (±1,0 dB)	24 dB (±1,0 dB)
Decoupling OUT-TAP				
5...65 MHz	>32 dB	>32 dB	>36 dB	>32 dB
65...470 MHz	>28 dB	>32 dB	>32 dB	>32 dB
470...862 MHz	>25 dB	>30 dB	>30 dB	>30 dB
862...1006 MHz	>24 dB	>30 dB	>30 dB	>30 dB
1006...1300 MHz	>22 dB	>28 dB	>28 dB	>28 dB
Decoupling TAP-TAP				
5...65 MHz	>30 dB	>30 dB	>30 dB	>30 dB
65...470 MHz	>28 dB	>28 dB	>28 dB	>28 dB
470...862 MHz	>25 dB	>25 dB	>25 dB	>25 dB
862...1006 MHz	>24 dB	>24 dB	>24 dB	>24 dB
1006...1300 MHz	>22 dB	>22 dB	>22 dB	>22 dB
Return loss				
5...65 MHz	>22dB	>22dB	>22dB	>22dB
65...470 MHz	>20dB	>20dB	>20dB	>20dB
470...862 MHz	>18dB	>18dB	>18dB	>18dB
862...1006 MHz	>18dB	>18dB	>18dB	>18dB
1006...1300 MHz	>16dB	>16dB	>16dB	>16dB
Connectors				
F-female	6pcs.(1x Input, 1x Loop through output, 4x TAP output)	6pcs.(1x Input, 1x Loop through output, 4x TAP output)	6pcs.(1x Input, 1x Loop through output, 4x TAP output)	6pcs.(1x Input, 1x Loop through output, 4x TAP output)
General data				
Screening factor	Class A (+10 dB), according to EN 50083-2	Class A (+10 dB), according to EN 50083-2	Class A (+10 dB), according to EN 50083-2	Class A (+10 dB), according to EN 50083-2
Intermodulation ratio	120 dBµV according to EN 60728-4	120 dBµV according to EN 60728-4	120 dBµV according to EN 60728-4	120 dBµV according to EN 60728-4
DC Bypass IN/OUT	No	No	No	No
Dimensions (w x h x d)	71,8 x 25,5 x 49,5 mm	71,8 x 25,5 x 49,5 mm	71,8 x 25,5 x 49,5 mm	71,8 x 25,5 x 49,5 mm

Tap BK 1.3 GHz

DM 64 A 1316

TAP asymmetrical 1,3 GHz,
4-way 13...16 dB

Technical Data	
Frequency range	5...1300 MHz
Through loss	
5...65 MHz	3,8 dB (±0,8 dB)
65...470 MHz	3,8 dB (±0,8 dB)
470...862 MHz	3,8 dB (±0,8 dB)
862...1006 MHz	4,0 dB (±1,0 dB)
1006...1300 MHz	5,0 dB (±1,0 dB)
TAP loss	
TAP 1	12,5 dB (±1,5 dB)
TAP 2	13,5 dB (±1,5 dB)
TAP 3	14,5 dB (±1,5 dB)
TAP 4	15,5 dB (±1,5 dB)

characteristics

- Frequency range from 5...1300 MHz (DOCSIS 3.1 capable)
- Screening factor according to Class A (+10 dB)
- High intermodulation suppression
- Very high port isolation and return loss
- High durability and perfect electrical values thanks to the white bronze plating
- Graded TAP loss
- Approved by Vodafone Kabel Deutschland

DM 66 A 1318

TAP asymmetrical 1,3 GHz,
6-way 13...18 dB

Technical Data	
Frequency range	5...1300 MHz
Through loss	
5...65 MHz	5,0 dB (±1,0 dB)
65...470 MHz	5,0 dB (±1,0 dB)
470...862 MHz	5,5 dB (±1,0 dB)
862...1006 MHz	6,5 dB (±1,0 dB)
1006...1300 MHz	7,5 dB (±1,5 dB)
TAP loss	
TAP 1	12,5 dB (±1,5 dB)
TAP 2	13,5 dB (±1,5 dB)
TAP 3	14,5 dB (±1,5 dB)
TAP 4	15,5 dB (±1,5 dB)
TAP 5	16,5 dB (±1,5 dB)
TAP 6	17,5 dB (±1,5 dB)

characteristics

- Frequency range from 5...1300 MHz (DOCSIS 3.1 capable)
- Screening factor according to Class A (+10 dB)
- High intermodulation suppression
- Very high port isolation and return loss
- High durability and perfect electrical values thanks to the white bronze plating
- Graded TAP loss
- Approved by Vodafone Kabel Deutschland

DM 68 A 1320

TAP asymmetrical 1,3 GHz,
8-way 13...20 dB

Technical Data	
Frequency range	5...1300 MHz
Through loss	
5...65 MHz	7,5 dB (±1,0 dB)
65...470 MHz	7,5 dB (±1,0 dB)
470...862 MHz	7,5 dB (±1,0 dB)
862...1006 MHz	8,0 dB (±1,5 dB)
1006...1300 MHz	9,5 dB (±1,5 dB)
TAP loss	
TAP 1	12,5 dB (±1,5 dB)
TAP 2	13,5 dB (±1,5 dB)
TAP 3	14,5 dB (±1,5 dB)
TAP 4	15,5 dB (±1,5 dB)
TAP 5	16,5 dB (±1,5 dB)
TAP 6	17,5 dB (±1,5 dB)
TAP 7	18,5 dB (±1,5 dB)
TAP 8	19,5 dB (±1,5 dB)

characteristics

- Frequency range from 5...1300 MHz (DOCSIS 3.1 capable)
- Screening factor according to Class A (+10 dB)
- High intermodulation suppression
- Very high port isolation and return loss
- High durability and perfect electrical values thanks to the white bronze plating
- Graded TAP loss
- Approved by Vodafone Kabel Deutschland

HIPER ALT

Tap BK 1.3 GHz

characteristics

- Frequency range from 5….2400 MHz
- Parallel distribution of satellite, cable and terrestrial signals possible
- Screening factor Class A
- DC-Bypass in the trunk line
- Removable plastic base for cable routing below the distributor

DM 51 1010

One-way tap, 11 dB

KLASSE A CLASS

DM 51 1015

One-way tap, 15 dB

KLASSE A CLASS

DM 51 1020

One-way tap, 20 dB

KLASSE A CLASS

Technical Data	DM 51 1010	DM 51 1015	DM 51 1020
Frequency range	5…2400 MHz	5…2400 MHz	5…2400 MHz
Through loss	1,5…2,5 dB	1,0…2,0 dB	0,7…1,8 dB
TAP loss	11 dB	15 dB	20 dB
Directional attenuation	32/25/22 dB (5…40/40…100/100…2400 MHz)	35/30/25 dB (5…40/40…100/100…2400 MHz)	40/32/28 dB (5…40/40…100/100…2400 MHz)
Return loss	18…22 dB	18…22 dB	18…22 dB
Connectors			
F-female	3 pcs. (1x input, 1x run through, 1x branch)	3 pcs. (1x input, 1x run through, 1x branch)	3 pcs. (1x input, 1x run through, 1x branch)
General data			
Screening factor	>85 dB (class A)	>85 dB (class A)	>85 dB (class A)
DC Bypass IN/OUT 1A/30V	Yes	Yes	Yes
Dimensions (width x height x depth)	52 x 50 x 18 mm	52 x 50 x 18 mm	52 x 50 x 18 mm

characteristics

- Frequency range from 5….2400 MHz
- Parallel distribution of satellite, cable and terrestrial signals possible
- Screening factor Class A
- DC-Bypass in the trunk line

DM 52 2010

Two-way tap, 11 dB

KLASSE A CLASS

DM 52 2015

Two-way tap, 15 dB

KLASSE A CLASS

DM 52 2020

Two-way tap, 20 dB

KLASSE A CLASS

Technical Data	DM 52 2010	DM 52 2015	DM 52 2020
Frequency range	5…2400 MHz	5…2400 MHz	5…2400 MHz
Through loss	3,0…4,0 dB	2,0…4,0 dB	1,5…3,5 dB
TAP loss	11 dB	15 dB	20 dB
Directional attenuation	23/20 dB (5…40/40…2400 MHz)	22 / 20 dB (5…40/40…2400 MHz)	25/20 dB (5…40/40…2400 MHz)
Isolation	≥28 dB	≥30 dB	≥32 dB
Return loss	18…22 dB	18…22 dB	18…22 dB
Connectors			
F-female	4 pcs. (1x input, 1x run through, 2x branch)	4 pcs. (1x input, 1x run through, 2x branch)	4 pcs. (1x input, 1x run through, 2x branch)
General data			
Screening factor	>85 dB (class A)	>85 dB (class A)	>85 dB (class A)
DC Bypass IN/OUT 1A/30V	Yes	Yes	Yes
Dimensions (width x height x depth)	74 x 48 x 18 mm	74 x 48 x 18 mm	74 x 48 x 18 mm

Tap SAT

DM 54 A 4010
Four-way tap, 10 dB

DM 54 A 4015
Four-way tap, 15/15 dB

DM 54 A 4020
Four-way tap, 20/20 dB

DM 54 A 4025
Four-way tap, 25 dB

characteristics

- Frequency range from 5....2400 MHz
- Parallel distribution of satellite, cable and terrestrial signals possible
- Screening factor according to Class A
- DC-Bypass in the trunk line

KLASSE A CLASS

Technical Data				
Frequency range	5...2400 MHz	5...2400 MHz	5...2400 MHz	5...2400 MHz
Through loss	3,5/4,5...5 dB (5...862/862...2400 MHz)	2,5/4,5 dB (5...862/862...2400 MHz)	1,0/2...2,5 dB (5...862/862...2400 MHz)	0,6/1,8...2,5 dB (5...862/862...2400 MHz)
TAP loss	10/10 dB (5...862/862...2400 MHz)	15/15 dB (5...862/862...2400 MHz)	20/20 dB (5...862/862...2400 MHz)	25/25 dB (5...862/862...2400 MHz)
Directional attenuation	≥25 dB	≥25 dB	≥25 dB	≥25 dB
Isolation	≥21 dB	≥21 dB	≥21 dB	≥21 dB
Return loss	18...22 dB	18...22 dB	18...22 dB	18...22 dB
Connectors				
F-female	6 pcs. (1x input, 1x run through, 4x branch)	6 pcs. (1x input, 1x run through, 4x branch)	6 pcs. (1x input, 1x run through, 4x branch)	6 pcs. (1x input, 1x run through, 4x branch)
General data				
Screening factor	>85 dB (class A)	>85 dB (class A)	>85 dB (class A)	>85 dB (class A)
DC Bypass IN/OUT 1A/30V	Yes	Yes	Yes	Yes
Dimensions (width x height x depth)	74 x 58 x 18 mm	74 x 58 x 18 mm	74 x 58 x 18 mm	74 x 58 x 18 mm

HIPER

Splitter BK 1 GHz

DM 02 B
Splitter, 2-way

DM 03 B
Splitter, 3-way

DM 04 B
Splitter, 4-way

characteristics
- Frequency range 5...1000 MHz
- Screening factor according to Class A
- High port isolation and return loss

KLASSE A CLASS

Technical Data	DM 02 B	DM 03 B	DM 04 B
Frequency range	5...1006 MHz	5...1006 MHz	5...1006 MHz
Distribution loss	3.7 dB	5.9 dB	7.5 dB
Isolation	30 dB	30 dB	30 dB
Return loss	18 dB	18 dB	18 dB
Connectors			
F-female	3 pcs. (1x input, 2x output)	4 pcs. (1x input, 3x output)	5 pcs. (1x input, 4x output)
General data			
Screening factor	>85 dB (class A)	>85 dB (class A)	>85 dB (class A)
DC Bypass IN/OUT 1A/30V	No	No	No
Dimensions (width x height x depth)	55x50x28 mm	78x50x28 mm	78x50x28 mm

DM 06 B
Splitter, 6-way

DM 08 B
Splitter, 8-way

characteristics
- Frequency range 5...1000 MHz
- Screening factor according to Class A
- High port isolation and return loss

KLASSE A CLASS

Technical Data	DM 06 B	DM 08 B
Frequency range	5...1006 MHz	5...1006 MHz
Distribution loss	10 dB	11 dB
Isolation	≥25 dB	>25 dB
Return loss	18 dB	18 dB
Connectors		
F-female	7 pcs. (1x input, 6x output)	9 pcs. (1x input, 8x output)
General data		
Screening factor	>85 dB (class A)	>85 dB (class A)
DC Bypass IN/OUT 1A/30V	No	No
Dimensions (width x height x depth)	115x54x42 mm	115x54x42 mm

Splitter BK 1.3 GHz

DM 02 D

Splitter 1,3 GHz, 2-way

DM 03 D

Splitter 1,3 GHz, 3-way

characteristics

- Frequency range from 5...1300 MHz (DOCSIS 3.1 capable)
- Screening factor according to Class A (+10 dB)
- High intermodulation suppression
- Very high port isolation and return loss
- High durability and perfect electrical values thanks to the white bronze plating
- Approved by Vodafone Kabel Deutschland

KLASSE A CLASS

KLASSE A CLASS

Technical Data		
Frequency range	5...1300 MHz	5...1300 MHz
Distribution loss		
5...65 MHz	3,3 dB (±0,5 dB)	5,2 dB (±0,5 dB)
65...470 MHz	3,3 dB (±0,5 dB)	5,2 dB (±0,5 dB)
470...862 MHz	3,5 dB (±0,5 dB)	5,6 dB (±0,5 dB)
862...1006 MHz	3,7 dB (±0,5 dB)	5,8 dB (±0,5 dB)
1006...1300 MHz	4,0 dB (±0,8 dB)	6,2 dB (±0,5 dB)
Isolation		
5...65 MHz	>30,0 dB	>28,0 dB
65...470 MHz	>28,0 dB	>28,0 dB
470...862 MHz	>26,0 dB	>26,0 dB
862...1006 MHz	>25,0 dB	>25,0 dB
1006...1300 MHz	>22,0 dB	>22,0 dB
Return loss		
5...65 MHz	>22,0 dB	>22,0 dB
65...470 MHz	>20,0 dB	>20,0 dB
470...862 MHz	>18,0 dB	>18,0 dB
862...1006 MHz	>18,0 dB	>18,0 dB
1006...1300 MHz	>16,0 dB	>16,0 dB
Connectors		
F-female	3 pcs. (1x input, 2x output)	4 pcs. (1x input, 3x output)
General data		
Screening factor	Class A (+10 dB), according to EN 50083-2	Class A (+10 dB), according to EN 50083-2
Intermodulation ratio	120 dBµV according to EN 60728-4	120 dBµV according to EN 60728-4
DC Bypass IN/OUT	No	No
Dimensions (width x height x depth)	47,5 x 25,5 x 49,5 mm	71,8 x 25,5 x 49,5 mm

Splitter BK 1.3 GHz

characteristics

- Frequency range from 5...1300 MHz (DOCSIS 3.1 capable)
- Screening factor according to Class A (+10 dB)
- High intermodulation suppression
- Very high port isolation and return loss
- Approved by Vodafone Kabel Deutschland

DM 04 D

Splitter 1,3 GHz, 4-way

KLASSE A CLASS

DM 06 D

Splitter 1,3 GHz, 6-way

KLASSE A CLASS

DM 08 D

Splitter 1,3 GHz, 8-way

KLASSE A CLASS

Technical Data			
Distribution loss		5...1300 MHz	5...1300 MHz
Frequency range	5...1300 MHz		
5...65 MHz	6,6 dB (±0,5 dB)	<8,5 dB (±0,5 dB)	<10,0 dB (±0,5 dB)
65...470 MHz	6,6 dB (±0,5 dB)	<8,8 dB (±0,5 dB)	<10,0 dB (±0,5 dB)
470...862 MHz	7,1 dB (±0,5 dB)	<9,4 dB (±0,5 dB)	<10,5 dB (±0,5 dB)
862...1006 MHz	7,5 dB (±0,5 dB)	<9,6 dB (±0,5 dB)	<11,0 dB (±0,5 dB)
1006...1300 MHz	7,9 dB (±0,5 dB)	<10,5 dB (±0,5 dB)	<11,5 dB (±0,8 dB)
Isolation			
5...65 MHz	>30,0 dB	>25,0 dB	>25,0 dB
65...470 MHz	>30,0 dB	>25,0 dB	>25,0 dB
470...862 MHz	>26,0 dB	>24,0 dB	>25,0 dB
862...1006 MHz	>25,0 dB	>24,0 dB	>24,0 dB
1006...1300 MHz	>22,0 dB	>22,0 dB	>22,0 dB
Return loss			
5...65 MHz	>22,0 dB	>18,0 dB	>18,0 dB
65...470 MHz	>20,0 dB	>18,0 dB	>18,0 dB
470...862 MHz	>18,0 dB	>18,0 dB	>18,0 dB
862...1006 MHz	>18,0 dB	>18,0 dB	>18,0 dB
1006...1300 MHz	>16,0 dB	>14,0 dB	>14,0 dB
Connectors			
F-female	5 pcs. (1x input, 4x output)	7 pcs. (1x input, 6x output)	9 pcs. (1x input, 8x output)
General data			
Screening factor	Class A (+10 dB), according to EN 50083-2	Class A (+10 dB), according to EN 50083-2	Class A (+10 dB), according to EN 50083-2
Intermodulation ratio	120 dBµV according to EN 60728-4	120 dBµV according to EN 60728-4	120 dBµV according to EN 60728-4
DC Bypass IN/OUT	No	No	No
Dimensions (width x height x depth)	71,8 x 25,5 x 49,5 mm	87,5 x 41,8 x 53,5 mm	111,5 x 41,8 x 53,5 mm

Splitter SAT

characteristics

- Frequency range from 5....2400 MHz
- Parallel distribution of satellite, cable and terrestrial signals possible
- Screening factor according to Class A
- DC bypass

DM 12 A

SAT splitter, 2-way

DM 13 A

SAT splitter, 3-way

DM 14 A

SAT splitter, 4-way

DM 16 B

SAT splitter, 6-way

Technical Data	DM 12 A	DM 13 A	DM 14 A	DM 16 B
Frequency range	5...2400 MHz	5...2400 MHz	5...2400 MHz	5...2400 MHz
Distribution loss	4...6 dB	7...10,5 dB	8...11,5 dB	11...17 dB
Isolation	>20 dB	>20 dB	>20 dB	>20 dB
Return loss	18 dB	18 dB	18 dB	18 dB
Connectors				
F-female	3 pcs. (1x input, 2x output)	4 pcs. (1x input, 3x output)	5 pcs. (1x input, 4x output)	7 pcs. (1x input, 6x output)
General data				
Screening factor	>85 dB (class A)	>85 dB (class A)	>85 dB (class A)	>85 dB (class A)
DC Bypass IN/OUT 1A/30V	Yes	Yes	Yes	Yes
Dimensions (width x height x depth)	55x55x28 mm	74x55x18 mm	74x55x18 mm	92x35x28 mm

HIPER AMA

Splitter SAT RF

characteristics

- 2-fold tap for multiswitch cascades
- Distribution of a satellite and terrestrial signals
- 13 dB junctionattenuation

DM 50

SAT splitter

KLASSE A CLASS

DM 90

SAT splitter

KLASSE A CLASS

Technical Data		
Frequency range	5...862/950...2400 MHz (TERR/SAT)	5...862/950...2400 MHz (TERR/SAT)
Through loss	1,0...1,8/1,1...2,7 dB (TERR/SAT)	1,5...3,0/2...3,5 dB (TERR/SAT)
TAP loss	13...13,5/12,2...13,7 dB (TERR/SAT)	13...14/14...12 dB (TERR/SAT)
Isolation	35/35 dB (trunk, TERR/SAT)	35/38 dB (trunk, TERR/SAT)
Return loss	10 dB (min., SAT)	10 dB (min., SAT)
Connectors		
F-female	20 pcs.	36 pcs.
General data		
Screening factor	Class A, EN 50083-2	Class A, EN 50083-2
DC Bypass IN/OUT 1A/30V	Yes	Yes

HIPER ANTA

Grounding accessories

NB 02 F

Equipotential bonding block, duplex

NB 04 F

Equipotential bonding block, quadruple

Technical Data		
Material	nickel plated brass	nickel plated brass
Hole distance	74 mm	137 mm
Hole diameter	4 mm	4 mm
Dimensions (width x height x depth)	84x24,5x27 mm	148x25x27 mm

Packaging Data		
Sales unit	1 pcs.	1 pcs.
Dimensions (WxHxD) sales unit	35 x 25 x 23 mm	41 x 27 x 13 mm
Packaging volume sales unit	dm^3	dm^3
Gross weight sales unit	0.041 kg	0.082 kg
Shipping unit	100 pcs.	100 pcs.
Dimensions (WxHxD) shipping unit	mm	mm
Packaging volume shipping package	-	-

NB 05

Grounding plate, 5-times

NB 09

Grounding angle, 9-times

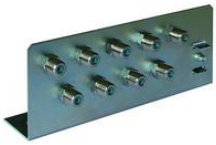

Technical Data		
Material	Steel	Steel
Hole distance	59.5 mm	125.9 mm
Hole diameter	6 mm	6 mm
Dimensions (width x height x depth)	79,50x60x53 mm	150,3x60x53 mm

Packaging Data		
Sales unit	1 pcs.	1 pcs.
Dimensions (WxHxD) sales unit	190 x 128 x 100 mm	260 x 170 x 110 mm
Packaging volume sales unit	dm^3	dm^3
Gross weight sales unit	0.137 kg	0.257 kg
Shipping unit	120 pcs.	120 pcs.
Dimensions (WxHxD) shipping unit	mm	mm
Packaging volume shipping package	2.43	2.5

Tools

DZ 01

Tightening aid

Technical Data	
Material	Aluminium, plastic

Packaging Data	
Sales unit	1 pcs.
Dimensions (WxHxD) sales unit	80 x 25 x 25 mm
Packaging volume sales unit	dm^3
Gross weight sales unit	0.1 kg
Shipping unit	pcs.
Dimensions (WxHxD) shipping unit	mm
Packaging volume shipping package	

characteristics

- For all F connectors with 11 mm (hexagonal)
- Twisting aid for simplified coaxial cable installation
- Ideal for confined spaces

DZ 14

Compression tool for F-connector

Technical Data	
Type of mounting	compress

Packaging Data	
Sales unit	1 pcs.
Dimensions (WxHxD) sales unit	300 x 200 x 80 mm
Packaging volume sales unit	dm^3
Gross weight sales unit	0.5 kg
Shipping unit	pcs.
Dimensions (WxHxD) shipping unit	mm
Packaging volume shipping package	0.9

characteristics

- For DV 14 or 10 mm coaxial cable
- Compression pliers for mounting compression plugs
- stable design

DZ 15 2130

Compression tool for F-connector

Technical Data	
Type of mounting	compress

Packaging Data	
Sales unit	1 pcs.
Dimensions (WxHxD) sales unit	300 x 150 x 150 mm
Packaging volume sales unit	dm^3
Gross weight sales unit	0.445 kg
Shipping unit	pcs.
Dimensions (WxHxD) shipping unit	mm
Packaging volume shipping package	0.9

characteristics

- For DV 10,10 N, 15 and 15 N or 5 / 7 mm coaxial cable
- Compression pliers for mounting compression plugs
- stable design

HIPER ANTENNA

Tools

DZ 85

Crimping tool

Technical Data	
Type of mounting	Crimp
Dimensions (width x height x depth)	70x122,5x23 mm

Packaging Data	
Sales unit	1 pcs.
Dimensions (WxHxD) sales unit	300 x 200 x 80 mm
Packaging volume sales unit	dm^3
Gross weight sales unit	0.5 kg
Shipping unit	pcs.
Dimensions (WxHxD) shipping unit	mm
Packaging volume shipping package	0.9

DZ 85 is a tool for processing the crimp plugs DV 85, DV 95... The plug can be pressed with DZ 85 after the cable is set down and the plug is pushed onto the cable.

MZ 01

COAX stripper

Technical Data	
suitable cable type	MK 91, 96, 86, 99 (adjustable for other cable sizes)

Packaging Data	
Sales unit	1 pcs.
Dimensions (WxHxD) sales unit	400 x 330 x 180 mm
Packaging volume sales unit	dm^3
Gross weight sales unit	0.061 kg
Shipping unit	pcs.
Dimensions (WxHxD) shipping unit	mm
Packaging volume shipping package	

MZ 01 is a stripping tool for a fast, clean and standardised discontinuation of coaxial cables. The inner and outer conductors are cleared in one operation by 2 adjustable blades. Adaptable to different types of coaxial cables.

HIPER ANTENA

F-termination resistor

DV 24

F-termination resistor

DV 25

F-terminating resistor with DC-separation

Technical Data		
Type	F-plug, load resistance 75 Ω	F-plug, load resistance 75 Ω
Type of mounting	Screwed	Screwed
construction style	straight	straight
Material	nickel plated brass	nickel plated brass
Dimensions (width x height x depth)	SW 11 x 17 mm	MK 91, MK96, MK99, MK86
DC seperation	No	SW 11 x 28 mm

F-plug connector

DV 50

F-plug

DV 54

F-plug

DV 55

F-plug

Technical Data			
Type	F-plug	F-plug	F-plug
Type of mounting	Screwed	Screwed	Screwed
construction style	straight	straight	straight
Material	nickel plated brass	nickel plated brass	nickel plated brass
suitable cable type	MK 76	MK 15	MK 91, MK 96, MK 99, MK 86 B
Dimensions (width x height x depth)	SW 11 x 22 mm	SW 12 x 30 mm	SW 11 x 21 mm
DC seperation	No	No	No

F-Crimp-plug

DV 85

F-plug, crimpable

DV 90

F-Quick-plug, crimpable

DV 95

F-Quick-plug, crimpable

DV 97

F-Quick-ellbow connector, crimp

Technical Data				
Type	F-plug	F-plug	F-plug	F-plug
Type of mounting	Crimp	Crimp	Crimp	Crimp
construction style	straight	straight	straight	angled
Material	nickel plated brass	nickel plated brass	nickel plated brass	nickel plated brass
suitable cable type	MK 91, MK 96, MK 99, MK 86 B	MK 76	MK 91, MK 96, MK 99, MK 86 B	MK 91, MK 96, MK 99, MK 86 B
Dimensions (width x height x depth)	SW 11 x 20 mm	Ø 11,80 x 25 mm	Ø 11,80 x 25 mm	34,5 x 12 x 22,9 mm
DC seperation	No	No	No	No

F-Compression-plug

DV 14 N

F-Compression-plug with NiTin-coating

DV 15 N

F-Compression-plug with NiTin-coating

characteristics

- NiTin-coating

Technical Data		
Type	F-plug	F-plug
Type of mounting	compress	compress
construction style	straight	straight
Material	brass with NiTin-coating	brass with NiTin-coating
suitable cable type	MK 15	MK 91, MK 96, MK 99, MK 86 B
Dimensions (width x height x depth)	- mm	SW 11 x 21,30 mm
DC seperation	No	No

F-Compression-plug

DV 10 N

F-Compression-plug with NiTin-coating

DV 15

F-Compress-plug

characteristics

- NiTin-coating

Technical Data		
Type	F-plug	F-plug
Type of mounting	compress	compress
construction style	straight	straight
Material	brass with NiTin-coating	nickel plated brass
suitable cable type	MK 76	MK 91, MK 96, MK 99, MK 86 B
Dimensions (width x height x depth)	SW 11 x 21,30 mm	SW 11 x 21,30 mm
DC seperation	No	No

IEC-plug / terminating resistor

DV 07 0397

Coaxial socket

Technical Data	
Type	IEC socket
Type of mounting	Plugged
construction style	straight
Material	nickel plated brass
suitable cable type	MK 76, MK 91, MK 96
Dimensions (width x height x depth)	Ø 14 x 38 mm
DC seperation	No

characteristics

- IEC coaxial socket straight
- Simple installation due to solderless terminal connection
- For coaxial cables with 1. 2. . . 4. 8 mm dielectric diameter

DV 75

Terminating resistor 75 Ω

Technical Data	
Type	IEC-plug, terminating resistor 75 Ω
Type of mounting	Plugged
construction style	straight
Material	nickel plated brass
Dimensions (width x height x depth)	Ø11 x 25 mm
DC seperation	No

characteristics

- 75 Ohm Terminating resistor
- IEC-plug
- Ideal termination of coaxial systems

Adapter

DV 49 A
Adapter plug

DV 52
F-adapter

DV 53
F-ellbow adapter

Technical Data			
Type	F-adapter, F-Fix on F-Quick	Transition connector IEC Male to F socket	F-angular adapter F-plug on F-connector
Type of mounting	Screwed/plugged	Screwed/plugged	Screwed
construction style	straight	straight	angled
Material	nickel plated brass	nickel plated brass	nickel plated brass
Dimensions (width x height x depth)	SW11x22,30 mm	11x25 mm	23,8x11x19,2 mm
DC seperation	No	No	No

Connector

DV 45
F-splice

characteristics
- 2x F-socket
- Simple and secure connection of 2 coaxial cables
- 180° angled version

DV 46 HQ
High quality plug adapter

Technical Data		
Type	F-splice	F-splice
Type of mounting	Screwed	Screwed
construction style	angled 180°	straight
Material	nickel plated brass	nickel plated brass
Dimensions (width x height x depth)	24,5x21x9,6 mm	11x26 mm
DC seperation	No	No

SUPER ANTENNA

Cable end plug

ZE 10 1200

Cable end plug KES for iKx, 1,2 GHz

ZE 11 1200

Cable end plug KES for nKx, 1,2 GHz

ZE 12 1200

Cable end plug KES for qKx, 1,2 GHz

ZE 13 1200

Cable end plug KES for sKx, 1,2 GHz

characteristics

- Impedance 75 Ohm
- Frequency range up to 1,2 GHz
- High-quality materials for ideal electrical properties and a long service life
- Approved by Vodafone Kabel Deutschland
- Approved by Unitymedia

Technical Data				
Type	Cable end plug KES	Cable end plug KES	Cable end plug KES	Cable end plug KES
Impedance	75 Ω	75 Ω	75 Ω	75 Ω
Through loss	≤0,1 dB	≤ 0,1 dB	≤ 0,1 dB	≤ 0,1 dB
Insertion resistance	≤ 2,0 mΩ	≤ 2,0 mΩ	≤ 2,0	≤ 2,0 mΩ
Isolation resistance (Inner conductor <-> Outer conductor)	≥ 50 GΩ (1 minute @ 500 V)	≥ 50 GΩ (1 minute @ 500 V)	≥ 50 GΩ (1 minute @ 500 V)	≥ 50 GΩ (1 minute @ 500 V)
Dielectric strength (Inner conductor <-> Outer conductor)	≥ 2 kV (1 minute)	≥ 2 kV (1 minute)	≥ 2 kV (1 minute)	≥ 2 kV (1 minute)
Return loss	≥ 30 dB (5...1218 MHz)	≥ 30 dB (5...1218 MHz)	≥ 30 dB (5...1218 MHz)	≥ 30 dB (5...606 MHz), ≥28 dB(606...1218 MHz)
Screening factor	≥ 85 dB (30...300 MHz) / ≥ 80 dB (300...470 MHz) / ≥ 75 dB (470...1218 MHz)	≥ 85 dB (30...300 MHz) / ≥ 80 dB (300...470 MHz) / ≥ 75 dB (470...1218 MHz)	≥ 85 dB (30...300 MHz) / ≥ 80 dB (300...470 MHz) / ≥ 75 dB (470...1218 MHz)	≥ 85 dB (30...300 MHz) / ≥ 80 dB (300...470 MHz) / ≥ 75 dB (470...1218 MHz)
Transfer impedance	≤ 5,0 mΩ	≤ 5,0 mΩ	≤ 5,0 mΩ	≤ 5,0 mΩ
Rated current	8 A (11 A ≥ 2 h)	8 A (11 A ≥ 2 h)	8 A (11 A ≥ 2 h)	8 A (11 A ≥ 2 h)
General data				
Material	Contact surface white bronze plated (CuSnZn)	Contact surface white bronze plated (CuSnZn)	Contact surface white bronze plated (CuSnZn)	Contact surface white bronze plated (CuSnZn)
Type of mounting	Plugged	Plugged	Plugged	Plugged
construction style	straight	straight	straight	straight
suitable cable type	Ø 1,1 mm/Ø 7,8 mm (Inner conductor/Outer conductor) iKx	Ø 2,2 mm/Ø 9,3 mm (Inner conductor/Outer conductor) nKx	Ø 3,3 mm/Ø 14,0 mm (Inner conductor/Outer conductor) qKx	Ø 4,9 mm/Ø 20,0 mm (Inner conductor/Outer conductor) sKx
Dimensions	22 x 22 x 56 mm	22 x 22 x 56 mm	22 x 22 x 56 mm	22 x 22 x 90 mm
DC seperation	No	No	No	No

Cable end plug

ZE 15 1200

Cable end plug KES for hKx, 1,2 GHz

ZE 16 1200

Cable end plug KES for kKx, 1,2 GHz

characteristics

- Impedance 75 Ohm
- Frequency range up to 1,2 GHz
- High-quality materials for ideal electrical properties and a long service life
- Approved by Vodafone Kabel Deutschland
- Approved by Unitymedia

Technical Data		
Type	Cable end plug KES	Cable end plug KES
Impedance	75 Ω	75 Ω
Through loss	≤ 0,1 dB	≤ 0,1 dB
Insertion resistance	≤ 2,0 mΩ	≤ 2,0 mΩ
Isolation resistance (Inner conductor <-> Outer conductor)	≥ 50 GΩ (1 minute @ 500 V)	≥ 50 GΩ (1 minute @ 500 V)
Dielectric strength (Inner conductor <-> Outer conductor)	≥ 2 kV (1 minute)	≥ 2 kV (1 minute)
Return loss	≥ 30 dB (5...606 MHz), ≥28 dB(606...1218 MHz)	≥ 30 dB (5...606 MHz), ≥28 dB(606...1218 MHz)
Screening factor	≥ 85 dB (30...300 MHz) / ≥ 80 dB (300...470 MHz) / ≥ 75 dB (470...1218 MHz)	≥ 85 dB (30...300 MHz) / ≥ 80 dB (300...470 MHz) / ≥ 75 dB (470...1218 MHz)
Transfer impedance	≤ 5,0 mΩ	≤ 5,0 mΩ
Rated current	8 A (11 A ≥ 2 h)	8 A (11 A ≥ 2 h)
General data		
Material	Contact surface white bronze plated (CuSnZn)	Contact surface white bronze plated (CuSnZn)
Type of mounting	Plugged	Plugged
construction style	straight	straight
suitable cable type	Ø 1,8 mm/Ø 12 mm (Inner conductor/Outer conductor) hKx	Ø 2,9 mm/Ø 20,0 mm (Inner conductor/Outer conductor) kKx
Dimensions	22 x 22 x 56 mm	22 x 22 x 90 mm
DC seperation	No	No

Cable end plug

ZG 22

Housing connection IEC to cable end plug, 1,2 GHz

Technical Data	
Type	Adapter KES on IEC-coupling
Type of mounting	Plugged
construction style	Straight/screwed
suitable cable type	
DC seperation	No
Transfer impedance	≤ 5,0 mΩ
Rated current	8 A (11 A ≥ 2 h)
Screening factor	≥ 85 dB (30…300 MHz) / ≥ 80 dB (300…470 MHz) / ≥ 75 dB (470…1218 MHz)
Return loss	≥30 dB (5…1218 MHz)
Through loss	≤0,1 dB
Isolation resistance (Inner conductor <-> Outer conductor)	≥50 GΩ (1 minute @ 500 V)
Material	White bronze (CuSnZn) plated
Dimensions	26,5 x 26,5 x 70 mm

characteristics

- Impedance 75 Ohm
- Frequency range up to 1,2 GHz
- Suitable for WISI KES ZExx 1200
- High-quality materials for ideal electrical properties and a long service life
- Approved by Vodafone Kabel Deutschland
- Approved by Unitymedia

ZK 10 1200

Contact sleeve for cable end plug, 1,2 GHz

Technical Data	
Type	Contact sleeve KES on KES
Type of mounting	Plugged
construction style	straight
Material	brass
suitable cable type	Cable with coax hard-line connector KES
Dimensions	22 x 22 x 105 mm
DC seperation	No
Transfer impedance	≤ 5,0 mΩ
Rated current	8 A (11 A ≥ 2 h)
Screening factor	≥ 85 dB (30…300 MHz) / ≥ 80 dB (300…470 MHz) / ≥ 75 dB (470…1218 MHz)
Return loss	≥ 38 dB (5…1218 MHz)
Through loss	≤0,1 dB

characteristics

- Impedance 75 Ohm
- Frequency range up to 1,2 GHz
- Suitable for WISI KES ZExx 1200
- Approved by Vodafone Kabel Deutschland
- Approved by Unitymedia

ZR 10 1200

Cable end plug terminating resistor, 1,2 GHz

Technical Data	
Type	Terminating resistor 75 Ω, KES
Impedance	75 Ω
Isolation resistance (Inner conductor <-> Outer conductor)	75 Ω
Return loss	≥ 26 dB (5…1218 MHz)
General data	
Material	Contact surface white bronze plated (CuSnZn)
Type of mounting	Plugged
construction style	straight
Dimensions	22 x 22 x 91 mm
DC seperation	No

characteristics

- Impedance 75 Ohm
- Frequency range up to 1,2 GHz
- Suitable for WISI ZK10 1200
- High-quality materials for ideal electrical properties and a long service life
- Approved by Vodafone Kabel Deutschland
- Approved by Unitymedia

HIPERA

Universal Antenna Sockets

DB 07

Universal antenna sockets,
2-hole loop-through sockets 14 dB

KLASSE A CLASS

Technical Data	
Inputs	
Frequency range	5...2400 MHz
Outputs	
Frequency range TV	5...862 MHz
Frequency range FM	87,5...108 MHz
Frequency range-SAT	950...2150 MHz
Insertion loss TV	14 dB
Insertion loss FM	14 dB
Insertion loss SAT	15 dB
Through loss	1 dB
Decoupling 5...40 MHz	≥40 dB (between 2 sockets / ab 10 MHz)
Decoupling 40...862 MHz	≥40 dB (between 2 boxes)
Decoupling 862...2400 MHz	≥40 dB (between 2 boxes)
Return loss TV	Cat C
Return loss Input	Cat B
Connectors	
Outer conductor clamp	7.5 mm
Inner conductor clamp	0,8...1,3 mm
IEC socket	1 pcs.
IEC-plug	1 pcs.
General data	
Screening factor	>85 dB (class A)
Dimensions (width x height x depth)	70 x 70 x 22 mm
Installation depth	35 mm

characteristics

- Broadband frequency range 5. . . 2400 MHz
- High decoupling of the subscriber outputs
- High class A shielding dimension, according to EN 50083-2

DB 05

Universal antenna sockets, 2-hole loop-through sockets 10 dB

KLASSE A CLASS

Technical Data	
Inputs	
Frequency range	5...2400 MHz
Outputs	
Frequency range IEC female	5...2400 MHz
Frequency range IEC male	5...2400 MHz
Insertion loss IEC female	10 dB (±1 dB)
Insertion loss IEC male	10 dB (±1 dB)
Through loss	2,5...3,5 dB
Decoupling OUT 1 - OUT 2	≥ 30 dB (5...2400 MHz)
Return loss subscriber	≥ 14 dB
Return loss Input	≥ 14 dB
Return loss output	≥ 14 dB
Connectors	
Outer conductor clamp	2,3...5,4 mm
Inner conductor clamp	0,4...1,15 mm
IEC socket	1 pcs.
IEC-plug	1 pcs.
General data	
Screening factor	Class A, by EN 50083-2 (≥ 85 dB)
Dimensions (width x height x depth)	70 x 70 x 22 mm
Installation depth	35 mm
Impedance	75 Ω

characteristics

- Broadband frequency range 5. . . 2400 MHz
- High decoupling of the subscriber outputs
- High class A shielding dimension, according to EN 50083-2

DB 03 A

Universal antenna sockets, 2-hole stub sockets 4 dB

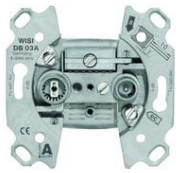

KLASSE A CLASS

Technical Data	
Inputs	
Frequency range	5...2400 MHz
Outputs	
Frequency range TV	5...862 MHz
Frequency range FM	87,5...108 MHz
Frequency range-SAT	950...2150 MHz
Insertion loss TV	4.5 dB
Insertion loss FM	4,5 dB
Insertion loss SAT	5 dB
Decoupling 5...40 MHz	>20 dB (from 15 MHz)
Decoupling 40...862 MHz	>20 dB
Decoupling 862...2400 MHz	>20 dB
Return loss TV	Cat C
Return loss Input	Cat B
Power passing	24 V DC (remote power 400 mA)
Connectors	
Outer conductor clamp	7.5 mm
Inner conductor clamp	0,8...1,3 mm
IEC socket	1 pcs.
IEC-plug	1 pcs.
General data	
Screening factor	>85 dB (class A)
Dimensions (width x height x depth)	70 x 70 x 22 mm
Installation depth	35 mm

characteristics

- Broadband frequency range 5. . . 2400 MHz
- For bidirectional BK systems or SAT distribution systems
- High decoupling of the subscriber outputs
- High class A shielding dimension, according to EN 50083-2
- DC bypass for multiswitch systems

Wall outlet sockets TERR/CATV

DB 10 1006

TERR/BK antenna socket, 2-hole stub socket 5…1006 MHz

KLASSE A CLASS

Technical Data	
Inputs	
Frequency range	5…1006 MHz
Outputs	
Frequency range TV	5…68/132…1006 MHz
Frequency range FM	87,5…108 MHz
Insertion loss TV	0.5 dB
Insertion loss FM	1.5 dB
Decoupling TV-FM	≥20 dB
Return loss TV	Cat C
Return loss Input	Cat B
Return loss FM	Cat C
Connectors	
Outer conductor clamp	7,5 mm
Inner conductor clamp	0,8…1,3 mm
IEC socket	1 pcs.
IEC-plug	1 pcs.
General data	
Screening factor	>85 dB (class A)
Dimensions (width x height x depth)	70 x 70 x 22 mm
Installation depth	35 mm

The DB 10 1006 is a TER terminating outlet with filter. It has a small connection loss at TV as FM 0.5 / 1.5 dB. The housing has a very high stability and ensures high shielding (class A). Thanks to a flat design its space-saving architecture and IEC socket / plug, a secure connection is ensured.

characteristics

- High class A shielding dimension, according to EN 50083-2
- Space-saving thanks to flat design
- 1x IEC-male, 1x IEC-female

HIPER ANTENA

Multimedia wall outlet sockets, individual

DD 04 M 0650

Broadband modem sockets, stub sockets, F

KLASSE A CLASS

Technical Data	
Inputs	
Frequency range	5...1006 MHz
Outputs	
Frequency range TV	85...1006 MHz
Frequency range FM	87...1006 MHz
Frequency range DATA	5...1006 MHz
Rejection loss TV	≥40 dB (5...65 MHz)
Rejection loss FM	≥40 dB (5...65 MHz)
Insertion loss TV	4 dB
Insertion loss FM	8 dB
Insertion loss DATA	8 dB
Isolation DATA - TV	≥70 dB (5...65 MHz)
Isolation DATA - TV	≥35 dB (85...1006 MHz)
Isolation DATA - FM	≥70 dB (5...65 MHz)
Isolation DATA - FM	≥40 dB (85...1006 MHz)
Return loss IN, OUT	≥18 dB (-1.5 dB/oct.)
Return loss TV	≥14 dB (-1.5 dB/oct.)
Return loss FM	≥14 dB (-1.5 dB/oct.)
Return loss DATA	≥18 dB (-1.5 dB/oct.)
Intermodulation ratio	> 120 dBµV (EN60728-4)
Connectors	
Outer conductor clamp	7,5 mm
Inner conductor clamp	0,6...1,3 mm
F-female	1 pcs. EN60169-24
IEC socket	1 pcs. EN60169-2
IEC-plug	1 pcs. EN60169-2
General data	
Screening factor	>85 dB Class A, EN 50083-2
Dimensions (width x height x depth)	70 x 70 x 22 mm
Installation depth	35 mm

TV connection with IEC technology. Multimedia with F-connector or WICLIC for cable modem. HF output high-pass filtered. Cover plate and connector cable see accessories

characteristics

- Approved by Vodafone Kabel Deutschland
- Very high decoupling of DATA/TV/Radio connections
- Screwable inner conductor clamp for secure and durable connection

ANTENA

Multimedia wall outlet sockets, loop-through

characteristics

- Approved by Vodafone Kabel Deutschland
- Very high decoupling of DATA/TV/Radio connections
- Screwable inner conductor clamp for secure and durable connection

DD 11 M 0650

Broadband modem sockets, loop-through sockets

KLASSE A CLASS

DD 15 M 0650

Broadband modem sockets, loop-through sockets

KLASSE A CLASS

DD 19 M 0650

Broadband modem sockets, loop-through sockets

KLASSE A CLASS

DD 23 M 0650

Broadband modem sockets, loop-through sockets

KLASSE A CLASS

Technical Data				
Inputs				
Frequency range	5...1006 MHz	5...1006 MHz	5...1006 MHz	5...1006 MHz
Outputs				
Frequency range TV	85...1006 MHz	85...1006 MHz	85...1006 MHz	85...1006 MHz
Frequency range FM	87...1006 MHz	87...1006 MHz	87...1006 MHz	87...1006 MHz
Frequency range DATA	5...1006 MHz	5...1006 MHz	5...1006 MHz	5...1006 MHz
Through loss	3...4 dB	1,2...1,75 dB	1,2...1,4 dB	1,2...1,4 dB
Rejection loss TV	≥40 dB (5...65 MHz)	≥40 dB 5...65 MHz	≥40 dB 5...65 MHz	≥40 dB 5...65 MHz
Rejection loss FM	≥40 dB (5...65 MHz)	≥40 dB 5...65 MHz	≥40 dB 5...65 MHz	≥40 dB 5...65 MHz
Insertion loss TV	10 dB	14 dB	19 dB	23 dB
Insertion loss FM	11 dB	15 dB	19 dB	24 dB
Insertion loss DATA	10 dB	14 dB	19 dB	23 dB
Isolation DATA - TV	≥70 dB (5...65 MHz)	≥70 dB (5...65 MHz)	≥70 dB (5...65 MHz)	≥70 dB (5...65 MHz)
Isolation DATA - TV	≥45 dB (85...1006 MHz)	≥50 dB (85...1006 MHz)	≥50 dB (85...1006 MHz)	≥50 dB (85...1006 MHz)
Isolation DATA - FM	≥70 dB (5...65 MHz)	≥70 dB (5...65 MHz)	≥70 dB (5...65 MHz)	≥70 dB (5...65 MHz)
Isolation DATA - FM	≥45 dB (85...1006 MHz)	≥50 dB (85...1006 MHz)	≥50 dB (85...1006 MHz)	≥50 dB (85...1006 MHz)
Isolation DATA - OUT	≥30 dB (5...1006 MHz)	≥30 dB (5...65 MHz)	≥30 dB (5...65 MHz)	≥30 dB (5...65 MHz)
Isolation FM, TV - OUT	≥30 dB (5...1006 MHz)	≥30 dB (5...65 MHz)	≥30 dB (5...65 MHz)	≥30 dB (5...65 MHz)
Return loss IN, OUT	≥18 dB (-1.5 dB/oct.)	≥18 dB (-1.5 dB/oct.)	≥18 dB (-1.5 dB/oct.)	≥18 dB (-1.5 dB/oct.)
Return loss TV	≥14 dB (-1.5 dB/oct.)	≥14 dB (-1.5 dB/oct.)	≥14 dB (-1.5 dB/oct.)	≥14 dB (-1.5 dB/oct.)
Return loss FM	≥14 dB (-1.5 dB/oct.)	≥14 dB (-1.5 dB/oct.)	≥14 dB (-1.5 dB/oct.)	≥14 dB (-1.5 dB/oct.)
Return loss DATA	≥18 dB (-1.5 dB/oct.)	≥18 dB (-1.5 dB/oct.)	≥18 dB (-1.5 dB/oct.)	≥18 dB (-1.5 dB/oct.)
Intermodulation ratio	> 120 dBµV (EN60728-4)	> 120 dBµV (EN60728-4)	> 120 dBµV (EN60728-4)	> 120 dBµV (EN60728-4)
Connectors				
Outer conductor clamp	7,5 mm	7.5 mm	7,5 mm	7,5 mm
Inner conductor clamp	0,6...1,3 mm	0,6...1,3 mm	0,6...1,3 mm	0,6...1,3 mm
F-female	1pcs.EN60169-24	1pcs.EN60169-24	1pcs.EN60169-24	1pcs.EN60169-24
IEC socket	1pcs.EN60169-2	1pcs.EN60169-2	1pcs.EN60169-2	1pcs.EN60169-2
IEC-plug	1pcs.EN60169-2	1pcs.EN60169-2	1pcs.EN60169-2	1pcs.EN60169-2
General data				
Screening factor	>85dBClass A, EN 50083-2	>85dB(class A)	>85dB(class A)	>85dB(class A)
Dimensions (width x height x depth)	mm	mm	mm	mm
Installation depth	35mm	35mm	35mm	35mm

Multimedia wall outlet sockets, loop-through

DD 15 HP

Broadband modem sockets, Data loop through socket with highpass filter

KLASSE A CLASS

Technical Data	
Inputs	
Frequency range	5...862 MHz
Outputs	
Frequency range TV	85...862 MHz
Frequency range FM	87...862 MHz
Frequency range DATA	5...862 MHz
Frequency range loop through	85...862 MHz
Insertion loss TV	14 dB
Insertion loss FM	14 dB
Insertion loss DATA	14 dB
Through loss	1,5...2,5 dB
Isolation DATA - TV	≥40 dB
Isolation DATA - FM	≥40 dB
Isolation DATA-DATA	74 dB (typ.)
Decoupling TV-FM	≥22 dB
Return loss IN	Cat B
Return loss OUT	Cat B
Return loss ALL	Cat C
Connectors	
Outer conductor clamp	7,5 mm
Inner conductor clamp	0,8...1,3 mm
F-female	1 pcs.
IEC socket	1 pcs.
IEC-plug	1 pcs.
General data	
Screening factor	>85 dB (class A)
Dimensions (width x height x depth)	70 x 70 x 22 mm
Installation depth	35 mm

TV connection with IEC technology. Multimedia with F-connector for cable modem. HF output high-pass filtered. Cover plate and connector cable see accessories

characteristics

- Approved by Vodafone Kabel Deutschland
- Very high decoupling of DATA/TV/Radio connections
- Screwable inner conductor clamp for secure and durable connection

ANTENA

Multimedia wall outlet sockets, terminal socket

DD 09 M 0650

Multimedia wall outlet sockets, terminal socket

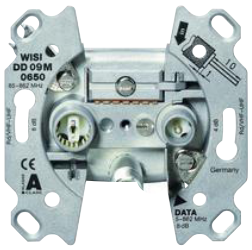

KLASSE A CLASS

Technical Data	
Inputs	
Frequency range	5...1006 MHz
Outputs	
Frequency range TV	85...1006 MHz
Frequency range FM	87...1006 MHz
Frequency range DATA	5...1006 MHz
Rejection loss TV	≥40 dB 5...65 MHz
Rejection loss FM	≥40 dB 5...65 MHz
Insertion loss TV	9 dB
Insertion loss FM	10 dB
Insertion loss DATA	9 dB
Isolation DATA - TV	≥60 dB (5...65 MHz)
Isolation DATA - TV	≥35 dB (85...1006 MHz)
Isolation DATA - FM	≥70 dB (5...65 MHz)
Isolation DATA - FM	≥45 dB (85...1006 MHz)
Return loss IN, OUT	≥18 dB (-1.5 dB/oct.)
Return loss TV	≥14 dB (-1.5 dB/oct.)
Return loss FM	≥14 dB (-1.5 dB/oct.)
Return loss DATA	≥18 dB (-1.5 dB/oct.)
Intermodulation ratio	> 120 dBµV (EN60728-4)
Connectors	
Outer conductor clamp	7,5 mm
Inner conductor clamp	0,6...1,3 mm
F-female	1 pcs. EN60169-24
IEC socket	1 pcs. EN60169-2
IEC-plug	1 pcs. EN60169-2
General data	
Screening factor	>85 dB (class A)
Dimensions (width x height x depth)	70 x 70 x 22 mm
Installation depth	35 mm

TV connection with IEC technology. Multimedia with F-connector or WICLIC for cable modem. HF output high-pass filtered. Cover plate and connector cable see accessories

characteristics

- Approved by Vodafone Kabel Deutschland
- Very high decoupling of DATA/TV/Radio connections
- Screwable inner conductor clamp for secure and durable connection

ANTENA

Wall-outlet sockets SAT

DB 53

SAT antenna sockets, 3-hole stub sockets

KLASSE A CLASS

Technical Data	
Inputs	
Frequency range	47...2150 MHz
Outputs	
Frequency range TV	47...68/174...862 MHz
Frequency range FM	87,5...108 MHz
Frequency range-SAT	950...2150 MHz
Insertion loss TV	<2 dB
Insertion loss FM	1,5 dB
Insertion loss SAT	<2 dB
Decoupling TV-SAT	≥15 dB (typ. 25 dB)
Return loss TV	≥14 dB (≤ -1,5 dB per octave starting 40 MHz, ≥10 dB)
Return loss Input	≥4 dB
Return loss FM	≥10 dB
Return loss SAT	≥10 dB
Power passing	24 V DC (remote power 500 mA)
Connectors	
Outer conductor clamp	7,5 mm
Inner conductor clamp	0,8...1,3 mm
F-female	1 pcs.
IEC socket	1 pcs.
IEC-plug	1 pcs.
General data	
Screening factor	>85 dB (class A)
Dimensions (width x height x depth)	70 x 70 x 22 mm
Installation depth	35 mm

characteristics

- 3-hole stub sockets
- Space-saving thanks to flat design
- High screening efficiency according to Class A

The DB 53 is a 3 hole trick box for separate connections for radio, TV receivers, and additional SAT receivers. At the SAT connection, a DC bypass is integrated, which allows for the transmission of all needed switching voltage. The housing offers high stability and ensures high shielding properties (class A). Thanks to the flat design it is space-saving, and with the IEC-socket/plug, F-socket, a safe connection is guaranteed.

ANTENA

Wall-outlet sockets SAT

DB 54

SAT antenna socket, twin SAT 4-hole terminal socket

KLASSE A CLASS

characteristics

- 2 SAT outputs for optimal signal feed of a twin receiver
- SAT output 2, also suitable for CATV
- High decoupling via directional coupler
- DC-bypass via both SAT outputs

Technical Data	
Inputs	
Frequency range	5...2400 MHz
Outputs	
Frequency range TV	5...862 MHz
Frequency range FM	87,5...108 MHz
Frequency range SAT 1	950...2400 MHz
Frequency range SAT 2	5...2400 MHz
Insertion loss TV	4,5 dB (±1)
Insertion loss FM	5,5 dB (±1)
Insertion loss SAT 1	3...4 dB
Insertion loss SAT 2	1...2 dB
Decoupling TV-FM	≥50/≥20/≥40 dB (5...65 MHz/87,5...108 MHz/150...862 MHz)
Decoupling SAT 1 - TV	≥50/≥30/≥20 dB (5...65 MHz/80...862 MHz/950...2400 MHz)
Decoupling SAT 1 - FM	≥50/≥40/≥30 dB (5...65 MHz/85...2150 MHz/2150...2400 MHz)
Decoupling SAT 1 - SAT 2	≥30/≥25 dB (5...2150 MHz/2150...2400 MHz)
Return loss TV	≥14 dB (≤ -1,5 dB per octave starting 40 MHz, ≥10 dB)
Return loss Input	≥4 dB (≤ -1,5 dB per octave starting 40 MHz, ≥10 dB)
Return loss FM	≥10 dB
Return loss SAT	≥10 dB
Return loss SAT 2	≥14 dB (≤ -1,5 dB per octave, starting 40 MHz, ≥ 10 dB)
Power passing	24 V DC (remote power 800 mA)
Connectors	
Outer conductor clamp	7,5 mm
Inner conductor clamp	0,8...1,3 mm
F-female	2 pcs.
IEC socket	1 pcs.

Technical Data	
IEC-plug	1 pcs.
General data	
Screening factor	85 dB (class A, EN 50083-2)
Dimensions (width x height x depth)	70 x 70 x 22 mm

The DB 54 is a special 4 hole trick box for TWIN receivers, which enables 2 lines to operate independently. The SAT 2 input is suitable for CATV as well. In both SAT connections, a DC bypass is integrated to enable the transmission of the required switching voltage. The housing offers high stability and ensures high shielding properties (class A). Thanks to the flat design it is space-saving, and with the IEC-socket/plug, 2x F-socket, a safe connection is guaranteed.

Wall-outlet sockets SAT

DB 64

3-hole Unicable antenna sockets

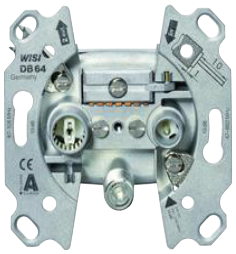

KLASSE A CLASS

Technical Data	
Inputs	
Frequency range	47...2150 MHz
Outputs	
Frequency range TV	47...68/120 ...862 MHz
Frequency range FM	87...108 MHz
Frequency range-SAT	950...2150 MHz
Insertion loss TV	12 dB
Insertion loss FM	12 dB
Insertion loss SAT	12,5 dB
Through loss	1...2 dB
Stopband attenuation	≥40 dB
Decoupling SAT-TV	≥18 dB (typ. 30 dB)
Decoupling SAT-FM	≥40 dB
Subscriber isolation VHF-UHF	≥42 dB
Subscriber decoupling SAT	≥32 dB
Return loss TV	Cat D
Return loss Input	Cat B
Return loss FM	Cat D
Return loss SAT	Cat D
Power passing	24 V DC
Connectors	
Outer conductor clamp	7,5 mm
Inner conductor clamp	0,8...1,3 mm
F-female	1 pcs.
IEC socket	1 pcs.
IEC-plug	1 pcs.
General data	
Screening factor	85 dB (class A, EN 50083-2)
Dimensions (width x height x depth)	70 x 70 x 22 mm
Installation depth	35 mm

The DB 64 is a 3-hole Unicable loop-through sockets for satellite receiving equipment to separately connect radio, TV receivers and additional SAT receivers. Inside the SAT connection a DC bypass is integrated which allows the passage of the required switching voltages. The housing has a very high stability despite a very flat construction. By F and IEC sockets and IEC connector, a faster and more reliable connection is ensured. If the DB 64 used as

characteristics

- Special socket for Unicable solutions
- High decoupling via directional coupler
- DC bypass on F-connector and the trunk

ANTENA

Accessories Wall-outlet sockets

DV 27

Terminating resistor 75 Ω, with DC-separation

Technical Data	
Type	75 Ω termination for loop sockets
Type of mounting	clamped
construction style	straight
Material	nickel plated brass
Dimensions (width x height x depth)	Ø 5 x 22 mm
DC seperation	Yes

characteristics

- For DB 64 or UNICABLE systems
- 75 Ohm Terminating resistor with DC block
- For mounting in through antenna sockets

DV 23

Terminating resistor 75 Ω

Technical Data	
Type	75 Ω termination for loop sockets
Type of mounting	clamped
construction style	straight
Material	nickel plated brass
Dimensions (width x height x depth)	Ø 5 x 21 mm
DC seperation	No

characteristics

- Terminalable 75 Ohm terminating resistor
- For mounting in through antenna sockets
- Without DC-Block

DW 44

Central cover plate, 2-hole, 85 x 85 mm

Technical Data	
General data	
Quantity of holes	2 pcs.
Dimensions (width x height x depth)	85 x 85 mm

characteristics

- Cover plate for 2-hole antenna sockets
- Colour: Pure white
- Incl. installation screw

DW 42

Central cover plate, 2-hole, 75 x 75 mm

Technical Data	
General data	
Quantity of holes	2 pcs.
Dimensions (width x height x depth)	75 x 75 mm

characteristics

- Cover plate for 2-hole antenna sockets
- Colour: Pure white
- Incl. installation screw

DW 45 T

Central cover plate, 4-hole, 75 x 75 mm

Technical Data	
General data	
Quantity of holes	4 pcs.
Dimensions (width x height x depth)	75 x 75 mm

characteristics

- Cover plate for 4-hole antenna sockets
- Colour: Pure white
- Incl. installation screw

Accessories Wall-outlet sockets

DW 45

Central cover plate, 3-hole, 75 x 75 mm

Technical Data	
General data	
Quantity of holes	3 pcs.
Dimensions (width x height x depth)	75 x 75 mm

characteristics

- Cover plate for 3-hole antenna sockets
- Colour: Pure white
- Incl. installation screw

DW 49 M

Central cover plate, 3-hole, 85 x 85 mm

Technical Data	
General data	
Quantity of holes	3 pcs.
Dimensions (width x height x depth)	85 x 85 mm

characteristics

- Approved by Vodafone Kabel Deutschland
- Cover plate for 3-hole antenna sockets
- Incl. installation screw
- Colour: Pure white

DW 49 T

Central cover plate, 4-hole, 85 x 85 mm

Technical Data	
General data	
Quantity of holes	4 pcs.
Dimensions (width x height x depth)	85 x 85 mm

characteristics

- Cover plate for 4-hole antenna sockets
- Colour: Pure white
- Incl. installation screw

DD 99

Mounting frame

Technical Data	
General data	
Dimensions (width x height x depth)	75 x 75 x 35 mm

characteristics

- Mounting frame for the exposed fitting of wall outlets
- Approved by Vodafone Kabel Deutschland
- Approved by Unitymedia

DW 41

Blocking socket for multimedia boxes

Technical Data	
General data	
Quantity of holes	2 pcs.

characteristics

- TV & Radio-Buchsensperre
- Can only be removed with special tools
- Suitable for all current multimedia cans

HILLER ANTENNA

DC blocker

DL 05

DC blocker

KLASSE A CLASS

Technical Data	
Frequency range	4...2500 MHz
Through loss	<0,8 dB
Connectors	
F-female	2 pcs.
F-plug	0 pcs.
General data	
Test voltage	2120 V DC
Dimensions (width x height x depth)	SW11x33 mm

DL 20 C

Galvanic separating element

Technical Data	
Frequency range	5...1800 MHz
Through/insertion loss input/output	5...470 MHz 0,8 dB, 471...1000 MHz 0,9 dB, 1001...1800 MHz 1,1 dB
Connectors	
F-female	2 pcs.
General data	
Test voltage	2120 V DC (DC T 1 minute, 0.7mA. 230 VAC 2.0 mA RMS(IEC-60728-11 § 10))
Dimensions (width x height x depth)	60 x 20 x 48 mm

DL 70

LTE-Filter 5...694 MHz

KLASSE A CLASS

Technical Data	
Frequency range	5...694 MHz
Through loss	<1,5 dB
Rejection	
Connectors	
F-female	1 pcs.
F-plug	1 pcs.
General data	
Screening factor	Class A
Dimensions (width x height x depth)	12x12x50 mm

DL 72

LTE-Filter 5...694 MHz, Outdoor

KLASSE A CLASS

Technical Data	
Frequency range	5...694 MHz
Through loss	<1,0 dB
Rejection	
Connectors	
F-female	2 pcs.
General data	
Screening factor	Class A
Dimensions (width x height x depth)	70x55x23 mm

ORDER ANY

CATV-Patch cable

characteristics

- Exceeds Class A (EN 50117-2-4)
- Screening efficiency >110 dB
- RoHS compliant

BK 76 0035

Patch cable, 35 cm, 75 Ohm

BK 76 0045

Patch cable, 45 cm, 75 Ohm

BK 96 0030

Patch cable, 30 cm, 75 Ohm

Technical Data			
Connectors			
F-plug	2 pcs. (straight, compress)	2 pcs. (straight, compress)	2 pcs. (straight, compress)
General data			
Length	0.35 m	0.45 m	0.3 m
Outer jacket material	PVC (RoHS compliant)	PVC (RoHS compliant)	PVC (RoHS compliant)

HIPER ANTENNA

Connection cable

DS 35 0035

DATA-connection cable F-Quick
+ F-Quick, 0,35 m

DS 35 0050

DATA-connection cable F-Quick
+ F-Quick, 0,5 m

characteristics

- 2x F-Quick straight
- Ideal patch cable with flexible outer sheath

Technical Data		
Mechanical Data		
Length	0,35 m	0,5 m
Outer jacket material	PVC RoHS compliant white	PVC RoHS compliant white
Outer jacket diameter	Ø 5,0 mm	Ø 5,0 mm
Cable construction		
Inner conductor material	Cu	Cu
Inner conductor diameter	Ø0,8 mm	Ø0,8 mm
Dielectric	Zell-PE, physics. foamed	Zell-PE, physics. foamed
Dielectricum diameter	Ø3,55 mm	Ø3,55 mm
Outer conductor 1	AL/Pet bonded	AL/Pet bonded
Outer conductor 2	CuSn	CuSn
Outer conductor 3	AL/Pet	AL/Pet
F-quick-male outer conductor	nickel plated brass	nickel plated brass
F-quick-male inner conductor		
Electrical data		
Frequency range	5...1000 MHz	5...1000 MHz
Through loss	<1 dB	<1 dB
Return loss	<20 dB	<20 dB
Coupling resistance 5…30 MHz	5 mΩ/m	5 mΩ/m
Screen class 30 … 1000 MHz	85 dB	85 dB
Screening factor	Class A, according to EN 50083-2	Class A, according to EN 50083-2

Connection cable

characteristics

- Class A++ > 105 dB (30...1000 MHz)
- Frequency range 5...1800 MHz
- Pre-assembled with 1 IEC female and 1 IEC male
- Bending radius: 30 mm
- Tensile strength > 130 N
- Unitymedia certfied

DS 37 U 0150

connecting cable IEC-female / IEC-male, 1,5 m

DS 37 U 0300

connecting cable IEC-female / IEC-male, 3 m

DS 37 U 0500

connecting cable IEC-female / IEC-male, 5 m

Technical Data			
Mechanical Data			
Length	1,5 m	3,0 m	5,0 m
Bend protection	Shrink tube black	Shrink tube black	Shrink tube black
Breaking stress	>130 N Cable / connector	>130 N Cable / connector	>130 N Cable / connector
Bending radius	30 mm	30 mm	30 mm
Outer jacket material	PVC black	PVC black	PVC black
Outer jacket diameter	Ø 5,00 mm (±0,1 mm)	Ø 5,00 mm (±0,1 mm)	Ø 5,00 mm (±0,1 mm)
Cable construction			
Inner conductor material	Cu-core	Cu-core	Cu-core
Inner conductor diameter	Ø 0,8 mm (±0,02 mm)	Ø 0,8 mm (±0,02 mm)	Ø 0,8 mm (±0,02 mm)
Dielectric	PE	PE	PE
Dielectricum diameter	Ø 3,55 mm (±0,05 mm)	Ø 3,55 mm (±0,05 mm)	Ø 3,55 mm (±0,05 mm)
Outer conductor 1	AL/Pet bonded	AL/Pet bonded	AL/Pet bonded
Outer conductor 2	Braid TCCA 24 x 4 x 0,12 (75% coverage)	Braid TCCA 24 x 4 x 0,12 (75% coverage)	Braid TCCA 24 x 4 x 0,12 (75% coverage)
Outer conductor 3	AL/Pet	AL/Pet	AL/Pet
Labeling			
Character height	3 mm White	3 mm White	3 mm White
Text	(DS37U 0150 105dB WISI YYY,WW)	(DS37U 0300 105dB WISI YYY,WW)	(DS37U 0500 105dB WISI YYY,WW)
IEC connector	(IEC 61169-2)	(IEC 61169-2)	(IEC 61169-2)
IEC-male outer conductor	Brass, plating white bronze. Color code: blue ring	Brass, plating white bronze. Color code: blue ring	Brass, plating white bronze. Color code: blue ring
IEC-male inner conductor	Brass, (plating white bronze)	Brass, (plating white bronze)	Brass, (plating white bronze)
Pull off / push on force IEC	≥40 N	≥40 N	≥40 N
IEC-female outer conductor	Brass, plating white bronze. Color code: green ring	Brass, plating white bronze. Color code: green ring	Brass, plating white bronze. Color code: green ring
IEC-female inner conductor	Brass, (plating white bronze)	Brass, (plating white bronze)	Brass, (plating white bronze)
Electrical data			
Frequency range	5...2400 MHz	5...2400 MHz	5...2400 MHz

Connection cable

characteristics

- Class A++ > 105 dB (30...1000 MHz)
- Frequency range 5...1800 MHz
- Pre-assembled with 1 F-Quick male and 1 IEC female
- Bending radius: 30 mm
- Tensile strength > 130 N
- Unitymedia certfied

DS 38 U 0150

Fly lead F-Quick / IEC-female, 1,5 m

KLASSE A CLASS

DS 38 U 0300

Fly lead F-Quick / IEC-female, 3 m

KLASSE A CLASS

DS 38 U 0500

Fly lead F-Quick / IEC-female, 5 m

KLASSE A CLASS

Technical Data			
Mechanical Data			
Length	1,5 m	3,0 m	5,0 m
Bend protection	Shrink tube black	Shrink tube black	Shrink tube black
Breaking stress	>130 N Cable / connector	>130 N Cable / connector	>130 N Cable / connector
Bending radius	30 mm	30 mm	30 mm
Outer jacket material	PVC black	PVC black	PVC black
Outer jacket diameter	Ø 5,00 mm (±0,1 mm)	Ø 5,00 mm (±0,1 mm)	Ø 5,00 mm (±0,1 mm)
Cable construction			
Inner conductor material	Cu-core	Cu-core	Cu-core
Inner conductor diameter	Ø 0,8 mm (±0,02 mm)	Ø 0,8 mm (±0,02 mm)	Ø 0,8 mm (±0,02 mm)
Dielectric	PE	PE	PE
Dielectricum diameter	Ø 3,55 mm (±0,05 mm)	Ø 3,55 mm (±0,05 mm)	Ø 3,55 mm (±0,05 mm)
Outer conductor 1	AL/Pet bonded	AL/Pet bonded	AL/Pet bonded
Outer conductor 2	Braid TCCA 24 x 4 x 0,12 (75% coverage)	Braid TCCA 24 x 4 x 0,12 (75% coverage)	Braid TCCA 24 x 4 x 0,12 (75% coverage)
Outer conductor 3	AL/Pet	AL/Pet	AL/Pet
Labeling			
Character height	3 mm White	3 mm White	3 mm White
Text	(DS38U 0150 105dB WISI YYY,WW)	(DS38U 0300 105dB WISI YYY,WW)	(DS38U 0500 105dB WISI YYY,WW)
F-quick connector	(IEC 61169-47)	(IEC 61169-47)	(IEC 61169-47)
F-quick-male outer conductor	Brass, Plating white bronze. Color code: red ring	Brass, Plating white bronze. Color code: red ring	Brass, Plating white bronze. Color code: red ring
F-quick-male inner conductor	Brass, (Plating gold)	Brass, (Plating gold)	Brass, (Plating gold)
Pull off / push on force F-quick	≥40 N	≥40 N	≥40 N
IEC connector	(IEC 61169-2)	(IEC 61169-2)	(IEC 61169-2)
IEC-female outer conductor	Brass, plating white bronze. Color code: green ring	Brass, plating white bronze. Color code: green ring	Brass, plating white bronze. Color code: green ring
IEC-female inner conductor	Brass, (plating white bronze)	Brass, (plating white bronze)	Brass, (plating white bronze)
Pull off / push on force IEC	≥40 N	≥40 N	≥40 N

Connection cable

DS 39 U 0150

Fly lead F-Quick / IEC-male, 1,5 m

DS 39 U 0300

connecting cable F-Quick / IEC-male, 3 m

DS 39 U 0500

connecting cable F-Quick / IEC-male, 5 m

characteristics

- Class A++ > 105 dB (30...1000 MHz)
- Frequency range 5...1800 MHz
- Pre-assembled with 1 F-Quick male and 1 IEC male
- Bending radius: 30 mm
- Tensile strength > 130 N
- Unitymedia certfied

Technical Data			
Mechanical Data			
Length	1,5 m	3,0 m	5,0 m
Bend protection	Shrink tube black	Shrink tube black	Shrink tube black
Breaking stress	>130 N Cable / connector	>130 N Cable / connector	>130 N Cable / connector
Bending radius	30 mm	30 mm	30 mm
Outer jacket material	PVC black	PVC black	PVC black
Outer jacket diameter	Ø 5,00 mm (±0,1 mm)	Ø 5,00 mm (±0,1 mm)	Ø 5,00 mm (±0,1 mm)
Cable construction			
Inner conductor material	Cu-core	Cu-core	Cu-core
Inner conductor diameter	Ø 0,8 mm (±0,02 mm)	Ø 0,8 mm (±0,02 mm)	Ø 0,8 mm (±0,02 mm)
Dielectric	PE	PE	PE
Dielectricum diameter	Ø 3,55 mm (±0,05 mm)	Ø 3,55 mm (±0,05 mm)	Ø 3,55 mm (±0,05 mm)
Outer conductor 1	AL/Pet bonded	AL/Pet bonded	AL/Pet bonded
Outer conductor 2	Braid TCCA 24 x 4 x 0,12 (75% coverage)	Braid TCCA 24 x 4 x 0,12 (75% coverage)	Braid TCCA 24 x 4 x 0,12 (75% coverage)
Outer conductor 3	AL/Pet	AL/Pet	AL/Pet
Labeling			
Character height	3 mm White	3 mm White	3 mm White
Text	(DS39U 0150 105dB WISI YYY,WW)	(DS39U 0300 105dB WISI YYY,WW)	(DS39U 0500 105dB WISI YYY,WW)
F-quick connector	(IEC 61169-47)	(IEC 61169-47)	(IEC 61169-47)
F-quick-male outer conductor	Brass, Plating white bronze. Color code: red ring	Brass, Plating white bronze. Color code: red ring	Brass, Plating white bronze. Color code: red ring
F-quick-male inner conductor	Brass, (Plating gold)	Brass, (Plating gold)	Brass, (Plating gold)
Pull off / push on force F-quick	≥40 N	≥40 N	≥40 N
IEC connector	(IEC 61169-2)	(IEC 61169-2)	(IEC 61169-2)
IEC-male outer conductor	Brass, plating white bronze. Color code: green ring	Brass, plating white bronze. Color code: green ring	Brass, plating white bronze. Color code: green ring
IEC-male inner conductor	Brass, (plating white bronze)	Brass, (plating white bronze)	Brass, (plating white bronze)
Pull off / push on force IEC	≥40 N	≥40 N	≥40 N

Connection cable

characteristics

- Class A++ > 105 dB (30...1000 MHz)
- Frequency range 5...1800 MHz
- Pre-assembled with 2 F-Quick male
- Bending radius: 30 mm
- Tensile strength > 130 N
- Unitymedia certfied

DS 50 U 0150

Fly lead F-Quick / F-Quick, 1,5 m

DS 50 U 0300

connecting cable F-Quick/ F-Quick, 3 m

DS 50 U 0500

Fly lead F-Quick / F-Quick, 5 m

DS 50 V 0200

Fly lead F-Quick / F-Quick, 2,0 m

Technical Data				
Mechanical Data				
Length	1,5 m	3,0 m	5,0 m	2,0 m
Bend protection	Shrink tube black	Shrink tube black	Shrink tube black	shrink tube
Breaking stress	>130 N Cable / connector	>130 N Cable / connector	>130 N Cable / connector	>130 N Cable / connector
Bending radius	30 mm	30 mm	30 mm	30 mm
Outer jacket material	PVC black	PVC black	PVC black	PVC white
Outer jacket diameter	Ø 5,00 mm (±0,1 mm)	Ø 5,00 mm (±0,1 mm)	Ø 5,00 mm (±0,1 mm)	Ø 5,00 mm (±0,1 mm)
Cable construction				
Inner conductor material	Cu-core	Cu-core	Cu-core	Cu-core
Inner conductor diameter	Ø 0,8 mm (±0,02 mm)	Ø 0,8 mm (±0,02 mm)	Ø 0,8 mm (±0,02 mm)	Ø 0,8 mm (±0,02 mm)
Dielectric	PE	PE	PE	PE
Dielectricum diameter	Ø 3,55 mm (±0,05 mm)	Ø 3,55 mm (±0,05 mm)	Ø 3,55 mm (±0,05 mm)	Ø 3,55 mm (±0,05 mm)
Outer conductor 1	AL/Pet bonded	AL/Pet bonded	AL/Pet bonded	AL/Pet bonded
Outer conductor 2	Braid TCCA 24 x 4 x 0,12 (75% coverage)	Braid TCCA 24 x 4 x 0,12 (75% coverage)	Braid TCCA 24 x 4 x 0,12 (75% coverage)	Braid TCCA 24 x 4 x 0,12 (75% coverage)
Outer conductor 3	AL/Pet	AL/Pet	AL/Pet	AL/Pet
Labeling				
Character height	3 mm White	3 mm White	3 mm White	3 mm black
Text	(DS50U 0150 105dB WISI YYY,WW)	(DS50U 0300 105dB WISI YYY,WW)	(DS50U 0500 105dB WISI YYY,WW)	WISI FQ(MS)-FQ(MS) Class A(+20 dB) acc. VF TS 5001 CW/YY
F-quick connector	(IEC 61169-47)	(IEC 61169-47)	(IEC 61169-47)	(IEC 61169-47)
F-quick-male outer conductor	Brass, Plating white bronze. Color code: red ring	Brass, Plating white bronze. Color code: red ring	Brass, Plating white bronze. Color code: red ring	Brass, plating white bronze
F-quick-male inner conductor	Brass, (Plating gold)	Brass, (Plating gold)	Brass, (Plating gold)	Red ring
Pull off / push on force F-quick	≥40 N	≥40 N	≥40 N	>15N
Electrical data				<35N
Frequency range	5...2400 MHz	5...2400 MHz	5...2400 MHz	Brass, Plating white bronze. Color code: red ring
Insertion loss at 1006 MHz	<0,9 dB	<1,8 dB	<3,0 dB	Brass, (plating white bronze)
Insertion loss at 2400 MHz	<1,3 dB	<2,7 dB	<4,5 dB	<40 N

Coaxial cabel

WISI Coaxial cable:
The perfect fit for every Installation.

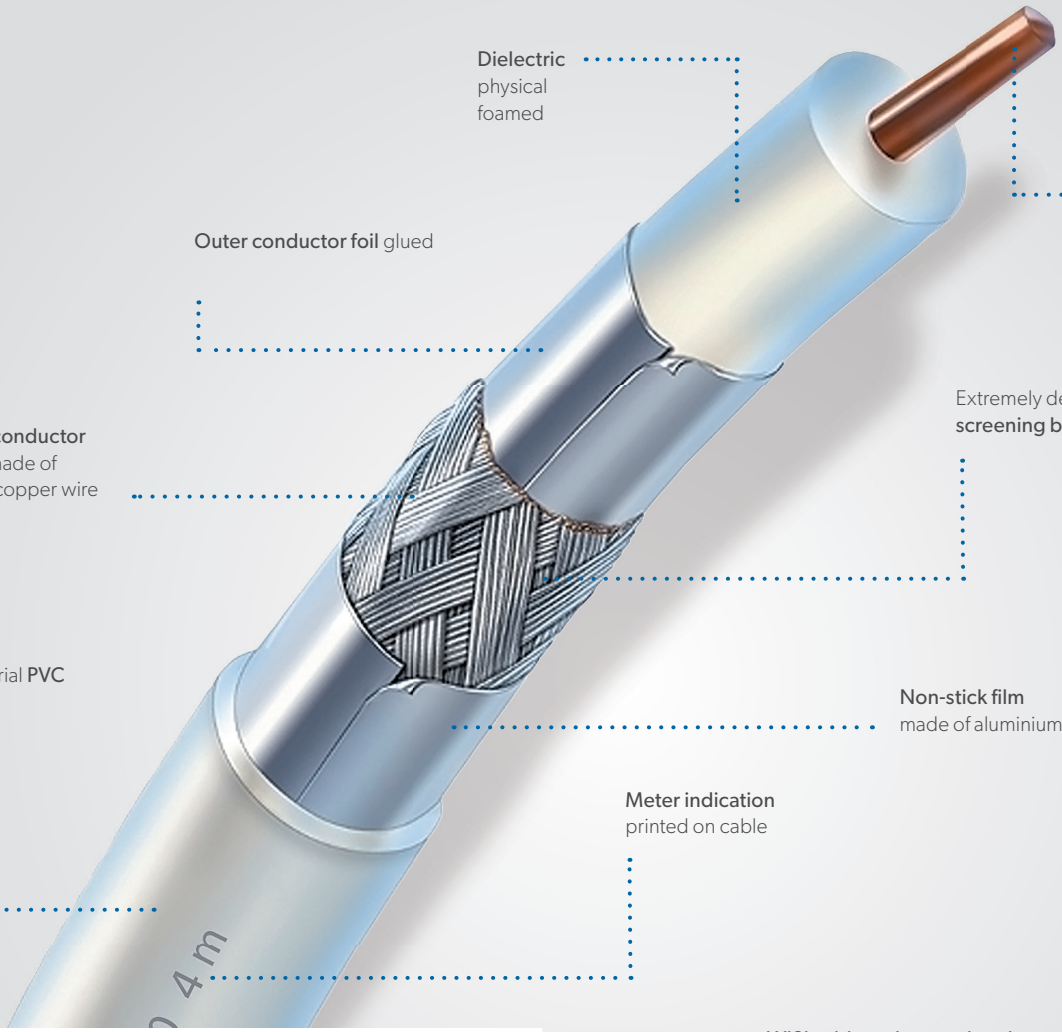

Also available in the practical **KoaxBox.**

WISI cables, plugs and sockets are perfectly matched to each other so that they achieve consistently high shielding. They are quick and easy to install, have excellent performance characteristics and are manufactured in the proven and well-known WISI quality.

At a glance

- better DC resistance due to copper inner conductor
- non-ageing foamed dielectric
- Bonded outer conductor foil prevents slipping while mounting the connector
- uniform covering of the cable by dense outer conductor braiding

Installation cable

MK 15 0500

Coaxial cable for wet rooms, Ø 10,3 mm, Length 500 m, PE black, on wood drum

KLASSE A CLASS

characteristics

- Class A++ (EN 50117-2-4)
- Screening efficiency > 125 dB
- Black PE outer sheath for wet rooms
- Triple shielded, bonded outer foil enables easy connector assembly
- Fulfills fire protection class Fca (EN 50575)
- Length indication at the outer sheath

Technical Data	
General data	
Installation	wet room
Screening factor	Class A++, according to EN 50117-2-3
Color	black
Length	500 m
Reaction to fire	Fca, according to BauPVO (EN 50117)
Construction	
Screening construction	3-way
Inner conductor	Ø 1,63 mm (Cu)
Insulation	Ø 7,2 mm (Foam PE, gas injected)
Outer conductor 1. Foil	Ø 7,3 mm (Al-Pet bonded)
Outer conductor 2. Braid	65 % (optical coating, tinned copper)
Outer conductor 3. Foil	Aluminium
Sheath	Ø 10,3 mm (PE black)
Electrical data	
Impedance	75 Ω
Velocity ratio	0,84
DC resistance inner conductor	8,5 Ω/km
DC resistance outer conductor	7,5 Ω/km
Rated current	16 A
Attenuation 5 MHz	0,9 dB (100 m)
Attenuation 50 MHz	2,8 dB (100 m)
Attentuation 100 MHz	3,9 dB (100 m)
Attentuation 400 MHz	8,2 dB (100 m)
Attentuation 860 MHz	12,3 dB (100 m)
Attenuation 1000 MHz	13,1 dB (100 m)
Attentuation 1400 MHz	15,7 dB (100 m)
Attentuation 2000 MHz	19,5 dB (100 m)
Attentuation 2400 MHz	21,6 dB (100 m)
Attentuation 3000 MHz	23,8 dB (100 m)

Packaging Data	
Sales unit	500 m (plastic drum)
Dimensions (WxHxD) sales unit	600 x 600 x 360 mm
Packaging volume sales unit	129.6 dm³
Gross weight sales unit	0.08 kg
Shipping unit	500 m
Dimensions (WxHxD) shipping unit	600 x 360 x 600 mm
Packaging volume shipping package	129,6

The MK 15 0500 is a 75 Ohm coaxial cable for the in-house installation in wet rooms or outside installation. The high-quality materials and the triple shielding with a screening efficiency of >125 dB guarantee an interference free transmission in distribution systems for cable TV, terrestrial and satellite signals. The MK 15 is approved by Vodafone Kabel Deutschland and perfect for the installation in return path capable multimedia networks. The inner conductor consists of pure copper enabling perfect electrical values and a high reliability. With the fire protection class Fca, the MK 15 complies with the Construction Products Regulation (CPR) EU No. 305/2011. The specific PE outer sheath protects the cable against humidity. The cable is compatible with the WISI connector system as well as commercially available connection accessories.

Installation cable

MK 76 A 0100

Coaxial cable 115 dB, Ø 5 mm, Length 100 m, PVC white,
Cable ring in plastic foil

KLASSE A CLASS

characteristics

- Screening class A+ (EN 50117-2-4)
- Screening efficiency > 115 dB
- Triple shielded, bonded outer foil enables easy connector assembly
- Fulfills fire protection class Eca (EN 50575)
- Length indication at the outer sheath

Technical Data	
General data	
Installation	Indoor installation
Screening factor	Class A+, according to EN 50117-2-4
Color	White
Length	100 m
Reaction to fire	Eca, according to CPR (EN 50575)
Construction	
Screening construction	3-way
Inner conductor	Ø 0,80 mm
Insulation	Ø 3,55 mm (Foam PE, gas injected)
Outer conductor 1. Foil	Ø 3,65 mm (Cu)
Outer conductor 2. Braid	58 % (optical coating, tinned copper)
Outer conductor 3. Foil	Aluminium
Sheath	Ø 5,0 mm (PVC, white)
Electrical data	
Impedance	75 Ω
Velocity ratio	0,85
DC resistance inner conductor	35,5 Ω/km
DC resistance outer conductor	16 Ω/km
Rated current	5 A
Attenuation 5 MHz	1,9 dB (100 m)
Attenuation 50 MHz	5,7 dB (100 m)
Attentuation 100 MHz	8,1 dB (100 m)
Attentuation 400 MHz	16,5 dB (100 m)
Attentuation 860 MHz	24,7 dB (100 m)
Attenuation 1000 MHz	26,7 dB (100 m)
Attentuation 1400 MHz	31,9 dB (100 m)
Attentuation 2000 MHz	38,6 dB (100 m)
Attentuation 2400 MHz	42,7 dB (100 m)
Attentuation 3000 MHz	48,2 dB (100 m)

Packaging Data	
Sales unit	100 m (Cable ring in plastic foil)
Dimensions (WxHxD) sales unit	415 x 525 x 265 mm
Packaging volume sales unit	dm^3
Gross weight sales unit	0.026 kg
Shipping unit	600 m
Dimensions (WxHxD) shipping unit	240 x 480 x 415 mm
Packaging volume shipping package	47,81

The MK 76 A 0100 is a 75 Ohm coaxial cable for the in-house installation. Due to the small diameter of 5 mm, it is perfectly suited for the laying in ductwork or installations with limited space. The triple shielding with a screening efficiency of >115 dB guarantees an interference free transmission in distribution systems for cable TV, terrestrial and satellite signals. The inner conductor consists of pure copper enabling perfect electrical values and a high reliability. With the fire protection class Eca the MK 76 A complies with the Construction Products Regulation (CPR) EU No. 305/2011. The PVC outer sheath is installation friendly and compatible with the WISI connector system as well as commercially available connection accessories.

Installation cable

MK 76 A 0101

Coaxial cable 115 dB, Ø 5 mm, Length 100 m, PVC white, on plastic drum

KLASSE A CLASS

characteristics

- Screening class A+ (EN 50117-2-4)
- Screening efficiency > 115 dB
- Triple shielded, bonded outer foil enables easy connector assembly
- Fulfills fire protection class Eca (EN 50575)
- Length indication at the outer sheath

Technical Data	
General data	
Installation	Indoor installation
Screening factor	Class A+, according to EN 50117-2-4
Color	White
Length	100 m
Reaction to fire	Eca, according to CPR (EN 50575)
Construction	
Screening construction	3-way
Inner conductor	Ø 0,80 mm
Insulation	Ø 3,55 mm (Foam PE, gas injected)
Outer conductor 1. Foil	Ø 3,65 mm (Cu)
Outer conductor 2. Braid	58 % (optical coating, tinned copper)
Outer conductor 3. Foil	Aluminium
Sheath	Ø 5,0 mm (PVC, white)
Electrical data	
Impedance	75 Ω
Velocity ratio	0,85
DC resistance inner conductor	35,5 Ω/km
DC resistance outer conductor	16 Ω/km
Rated current	5 A
Attenuation 5 MHz	1,9 dB (100 m)
Attenuation 50 MHz	5,7 dB (100 m)
Attentuation 100 MHz	8,1 dB (100 m)
Attentuation 400 MHz	16,5 dB (100 m)
Attentuation 860 MHz	24,7 dB (100 m)
Attenuation 1000 MHz	26,7 dB (100 m)
Attentuation 1400 MHz	31,9 dB (100 m)
Attentuation 2000 MHz	38,6 dB (100 m)
Attentuation 2400 MHz	42,7 dB (100 m)
Attentuation 3000 MHz	48,2 dB (100 m)

Packaging Data	
Sales unit	100 m (plastic drum)
Dimensions (WxHxD) sales unit	340 x 400 x 400 mm
Packaging volume sales unit	dm^3
Gross weight sales unit	0.031 kg
Shipping unit	500 m
Dimensions (WxHxD) shipping unit	290 x 675 x 280 mm
Packaging volume shipping package	54,81

The MK 76 A 0101 is a 75 Ohm coaxial cable for the in-house installation. Due to the small diameter of 5 mm, it is perfectly suited for the laying in ductwork or installations with limited space. The triple shielding with a screening efficiency of >115 dB guarantees an interference free transmission in distribution systems for cable TV, terrestrial and satellite signals. The inner conductor consists of pure copper enabling perfect electrical values and a high reliability. With the fire protection class Eca the MK 76 A complies with the Construction Products Regulation (CPR) EU No. 305/2011. The PVC outer sheath is installation friendly and compatible with the WISI connector system as well as commercially available connection accessories.

Installation cable

MK 76 A 0500

Coaxial cable 115 dB, Ø 5 mm, Length 500 m, PVC white, on plastic drum

KLASSE A CLASS

characteristics

- Screening class A+ (EN 50117-2-4)
- Screening efficiency > 115 dB
- Triple shielded, bonded outer foil enables easy connector assembly
- Fulfills fire protection class Eca (EN 50575)
- Length indication at the outer sheath

Technical Data	
General data	
Installation	Indoor installation
Screening factor	Class A+, according to EN 50117-2-4
Color	White
Length	500 m
Reaction to fire	Eca, according to CPR (EN 50575)
Construction	
Screening construction	3-way
Inner conductor	Ø 0,80 mm
Insulation	Ø 3,55 mm (Foam PE, gas injected)
Outer conductor 1. Foil	Ø 3,65 mm (Cu)
Outer conductor 2. Braid	58 % (optical coating, tinned copper)
Outer conductor 3. Foil	Aluminium
Sheath	Ø 5,0 mm (PVC, white)
Electrical data	
Impedance	75 Ω
Velocity ratio	0,85
DC resistance inner conductor	35,5 Ω/km
DC resistance outer conductor	16 Ω/km
Rated current	5 A
Attenuation 5 MHz	1,9 dB (100 m)
Attenuation 50 MHz	5,7 dB (100 m)
Attentuation 100 MHz	8,1 dB (100 m)
Attentuation 400 MHz	16,5 dB (100 m)
Attentuation 860 MHz	24,7 dB (100 m)
Attenuation 1000 MHz	26,7 dB (100 m)
Attentuation 1400 MHz	31,9 dB (100 m)
Attentuation 2000 MHz	38,6 dB (100 m)
Attentuation 2400 MHz	42,7 dB (100 m)
Attentuation 3000 MHz	48,2 dB (100 m)

Packaging Data	
Sales unit	500 m (plastic drum)
Dimensions (WxHxD) sales unit	360 x 370 x 220 mm
Packaging volume sales unit	dm^3
Gross weight sales unit	0.03 kg
Shipping unit	1000 m
Dimensions (WxHxD) shipping unit	360 x 710 x 220 mm
Packaging volume shipping package	56,23

The MK 76 A 0500 is a 75 Ohm coaxial cable for the in-house installation. Due to the small diameter of 5 mm, it is perfectly suited for the laying in ductwork or installations with limited space. The triple shielding with a screening efficiency of >115 dB guarantees an interference free transmission in distribution systems for cable TV, terrestrial and satellite signals. The inner conductor consists of pure copper enabling perfect electrical values and a high reliability. With the fire protection class Eca the MK 76 A complies with the Construction Products Regulation (CPR) EU No. 305/2011. The PVC outer sheath is installation friendly and compatible with the WISI connector system as well as commercially available connection accessories.

Installation cable

MK 86 B 0101

Coaxial cable 110 dB, Ø 6,9 mm, Length 100 m, PVC white, on plastic drum

KLASSE A+ CLASS

characteristics

- Screening class A+ (EN 50117-2-4)
- Screening efficiency >110 dB
- Triple shielded, bonded outer foil enables easy connector assembly
- Fulfills fire protection class Eca (EN 50575)
- Length indication at the outer sheath

Technical Data	
General data	
Installation	Indoor installation
Screening factor	Screening class A+ (EN 50117-2-4)
Color	White
Length	100 m
Reaction to fire	Eca, according to CPR (EN 50575)
Construction	
Screening construction	3-way
Inner conductor	Ø 1.02 mm (CCS)
Insulation	Ø 4.7 mm (Foam PE, gas injected)
Outer conductor 1. Foil	Ø 4.85 mm (AL/PET/SY bonded)
Outer conductor 2. Braid	80 % (AL)
Outer conductor 3. Foil	(AL/PET/SY)
Sheath	Ø 6,9 mm (PVC, white)
Electrical data	
Impedance	75 Ω
Velocity ratio	0.84
DC resistance inner conductor	<100 Ω/km
DC resistance outer conductor	<24 Ω/km
Rated current	8 A
Attenuation 5 MHz	2.4 dB (100 m)
Attenuation 50 MHz	4.3 dB (100 m)
Attentuation 100 MHz	6.0 dB (100 m)
Attentuation 400 MHz	12.7 dB (100 m)
Attentuation 800 MHz	18.2 dB (100 m)
Attenuation 1000 MHz	20.5 dB (100 m)
Attentuation 1400 MHz	24.5 dB (100 m)
Attentuation 2000 MHz	31.4 dB (100 m)
Attentuation 2400 MHz	32.8 dB (100 m)
Attentuation 3000 MHz	37.4 dB (100 m)

Packaging Data	
Sales unit	100 m (plastic drum)
Dimensions (WxHxD) sales unit	280 x 280 x 140 mm
Packaging volume sales unit	11 dm^3
Gross weight sales unit	0.042 kg
Shipping unit	m
Dimensions (WxHxD) shipping unit	300 x 295 x 680 mm
Packaging volume shipping package	60.2 dm^3

The MK 86 B 0101 is a 75 Ohm coaxial cable for the in-house installation. The quality materials and the triple shielding, with a screening efficiency of >110 dB, guarantees an interference free transmission. Thanks to its low cable loss and the perfect installation characteristics, the MK 86 B is ideal for the use in SAT-IF and terrestrial distribution systems. With the fire protection class Eca, the MK 86 B complies with the Construction Products Regulation (CPR) EU No. 305/2011. The PVC outer sheath is installation friendly and compatible with the WISI connector system as well as commercially available connection accessories.

Installation cable

MK 86 B 0250

Coaxial cable 110 dB, Ø 6,9 mm, Length 250 m, PVC white, on plastic drum

KLASSE A+ CLASS

characteristics

- Screening class A+ (EN 50117-2-4)
- Screening efficiency >110 dB
- Triple shielded, bonded outer foil enables easy connector assembly
- Fulfills fire protection class Eca (EN 50575)
- Length indication at the outer sheath

Technical Data	
General data	
Installation	Indoor installation
Screening factor	Screening class A+ (EN 50117-2-4)
Color	White
Length	250 m
Reaction to fire	Eca, according to CPR (EN 50575)
Construction	
Screening construction	3-way
Inner conductor	Ø 1.02 mm (CCS)
Insulation	Ø 4.7 mm (Foam PE, gas injected)
Outer conductor 1. Foil	Ø 4.85 mm (AL/PET/SY bonded)
Outer conductor 2. Braid	80 % (AL)
Outer conductor 3. Foil	(AL/PET/SY)
Sheath	Ø 6.9 mm (PVC, white)
Electrical data	
Impedance	75 Ω
Velocity ratio	0.84
DC resistance inner conductor	<100 Ω/km
DC resistance outer conductor	<24 Ω/km
Rated current	8 A
Attenuation 5 MHz	2.4 dB (100 m)
Attenuation 50 MHz	4.3 dB (100 m)
Attentuation 100 MHz	6.0 dB (100 m)
Attentuation 400 MHz	12.7 dB (100 m)
Attentuation 800 MHz	18.2 dB (100 m)
Attenuation 1000 MHz	20.5 dB (100 m)
Attentuation 1400 MHz	24.5 dB (100 m)
Attentuation 2000 MHz	31.4 dB (100 m)
Attentuation 2400 MHz	32.8 dB (100 m)
Attentuation 3000 MHz	37.4 dB (100 m)

Packaging Data	
Sales unit	250 m (plastic drum)
Dimensions (WxHxD) sales unit	350 x 350 x 195 mm
Packaging volume sales unit	24 dm³
Gross weight sales unit	0.042 kg
Shipping unit	m
Dimensions (WxHxD) shipping unit	380 x 380 x 415 mm
Packaging volume shipping package	60 dm³

The MK 86 B 0250 is a 75 Ohm coaxial cable for the in-house installation. The quality materials and the triple shielding, with a screening efficiency of >110 dB, guarantees an interference free transmission. Thanks to its low cable loss and the perfect installation characteristics, the MK 86 B is ideal for the use in SAT-IF and terrestrial distribution systems. With the fire protection class Eca, the MK 86 B complies with the Construction Products Regulation (CPR) EU No. 305/2011. The PVC outer sheath is installation friendly and compatible with the WISI connector system as well as commercially available connection accessories.

Installation cable

MK 96 A 0100

Coaxial cable 120 dB, Ø 6,8 mm, Length 100 m, PVC white,
Cable ring in plastic foil

KLASSE A CLASS

characteristics

- Screening class A+ (EN 50117-2-4)
- Screening efficiency >120 dB
- Triple shielded, bonded outer foil enables easy connector assembly
- Fulfills fire protection class Dca, s3, d2, a3 (EN 50575)
- Approved by Vodafone Kabel Deutschland

Technical Data	
General data	
Installation	Indoor installation
Screening factor	Class A+, according to EN 50117-2-4
Color	White
Length	100 m
Reaction to fire	Dca, s3, d2, a3, according to BauPVO (EN 50117)
Construction	
Screening construction	3-way
Inner conductor	Ø 1,02 mm (Cu)
Insulation	Ø 4,7 mm (Foam PE, gas injected)
Outer conductor 1. Foil	Ø 4,85 mm (Al-Pet bonded)
Outer conductor 2. Braid	63 % (optical coating, tinned copper)
Outer conductor 3. Foil	Aluminium
Sheath	Ø 6,8 mm (PVC, white)
Electrical data	
Impedance	75 Ω
Velocity ratio	0,84
DC resistance inner conductor	21,2 Ω/km
DC resistance outer conductor	11,7 Ω/km
Rated current	8 A
Attenuation 5 MHz	1,3 dB (100 m)
Attenuation 50 MHz	4,1 dB (100 m)
Attentuation 100 MHz	5,9 dB (100 m)
Attentuation 400 MHz	12,0 dB (100 m)
Attentuation 860 MHz	17,9 dB (100 m)
Attenuation 1000 MHz	19,4 dB (100 m)
Attentuation 1400 MHz	23,2 dB (100 m)
Attentuation 2000 MHz	28,2 dB (100 m)
Attentuation 2400 MHz	31,4 dB (100 m)
Attentuation 3000 MHz	35,6 dB (100 m)

Packaging Data	
Sales unit	100 m (Cable ring in plastic foil)
Dimensions (WxHxD) sales unit	415 x 525 x 265 mm
Packaging volume sales unit	dm^3
Gross weight sales unit	0.05 kg
Shipping unit	600 m
Dimensions (WxHxD) shipping unit	265 x 415 x 525 mm
Packaging volume shipping package	57,74

The MK 96 A 0100 is a 75 Ohm coaxial cable for the in-house installation. The high-quality materials and the triple shielding, with a screening efficiency of >120 dB, guarantees an interference free transmission in distribution systems for cable TV, terrestrial and satellite signals. The MK 96 A is approved by Vodafone Kabel Deutschland and perfect for the installation in return path capable multimedia networks. The inner conductor consists of pure copper enabling perfect electrical values and a high reliability. With the fire protection class Dca, s3, d2, a3 the MK 96 A complies with the Construction Products Regulation (CPR) EU No. 305/2011. The PVC outer sheath is installation friendly and compatible with the WISI connector system as well as commercially available connection accessories.

Installation cable

MK 96 A 0101

Coaxial cable 120 dB, Ø 6,8 mm, Length 100 m, PVC white, on plastic drum

KLASSE A CLASS

characteristics

- Screening class A+ (EN 50117-2-4)
- Screening efficiency >120 dB
- Triple shielded, bonded outer foil enables easy connector assembly
- Fulfills fire protection class Dca, s3, d2, a3 (EN 50575)
- Approved by Vodafone Kabel Deutschland

Technical Data	
General data	
Installation	Indoor installation
Screening factor	Class A+, according to EN 50117-2-4
Color	White
Length	100 m
Reaction to fire	Dca, s3, d2, a3, according to BauPVO (EN 50117)
Construction	
Screening construction	3-way
Inner conductor	Ø 1,02 mm (Cu)
Insulation	Ø 4,7 mm (Foam PE, gas injected)
Outer conductor 1. Foil	Ø 4,85 mm (Al-Pet bonded)
Outer conductor 2. Braid	63 % (optical coating, tinned copper)
Outer conductor 3. Foil	Aluminium
Sheath	Ø 6,8 mm (PVC, white)
Electrical data	
Impedance	75 Ω
Velocity ratio	0,84
DC resistance inner conductor	21,2 Ω/km
DC resistance outer conductor	11,7 Ω/km
Rated current	8 A
Attenuation 5 MHz	1,3 dB (100 m)
Attenuation 50 MHz	4,1 dB (100 m)
Attentuation 100 MHz	5,9 dB (100 m)
Attentuation 400 MHz	12,0 dB (100 m)
Attentuation 860 MHz	17,9 dB (100 m)
Attenuation 1000 MHz	19,4 dB (100 m)
Attentuation 1400 MHz	23,2 dB (100 m)
Attentuation 2000 MHz	28,2 dB (100 m)
Attentuation 2400 MHz	31,4 dB (100 m)
Attentuation 3000 MHz	35,6 dB (100 m)

Packaging Data	
Sales unit	100 m (plastic drum)
Dimensions (WxHxD) sales unit	340 x 400 x 400 mm
Packaging volume sales unit	dm^3
Gross weight sales unit	0.05 kg
Shipping unit	500 m
Dimensions (WxHxD) shipping unit	290 x 280 x 675 mm
Packaging volume shipping package	54,81

The MK 96 A 0101 is a 75 Ohm coaxial cable for the in-house installation. The high-quality materials and the triple shielding, with a screening efficiency of >120 dB, guarantees an interference free transmission in distribution systems for cable TV, terrestrial and satellite signals. The MK 96 A is approved by Vodafone Kabel Deutschland and perfect for the installation in return path capable multimedia networks. The inner conductor consists of pure copper enabling perfect electrical values and a high reliability. With the fire protection class Dca, s3, d2, a3 the MK 96 A complies with the Construction Products Regulation (CPR) EU No. 305/2011. The PVC outer sheath is installation friendly and compatible with the WISI connector system as well as commercially available connection accessories.

Installation cable

MK 96 A 0250

Coaxial cable 120 dB, Ø 6,8 mm, Length 250 m, PVC white, Cable ring in plastic foil

KLASSE A CLASS

characteristics

- Screening class A+ (EN 50117-2-4)
- Screening efficiency >120 dB
- Triple shielded, bonded outer foil enables easy connector assembly
- Fulfills fire protection class Dca, s3, d2, a3 (EN 50575)
- Approved by Vodafone Kabel Deutschland

Technical Data	
General data	
Installation	Indoor installation
Screening factor	Class A+, according to EN 50117-2-4
Color	White
Length	250 m
Reaction to fire	Dca, s3, d2, a3, according to BauPVO (EN 50117)
Construction	
Screening construction	3-way
Inner conductor	Ø 1,02 mm (Cu)
Insulation	Ø 4,7 mm (Foam PE, gas injected)
Outer conductor 1. Foil	Ø 4,85 mm (Al-Pet bonded)
Outer conductor 2. Braid	63 % (optical coating, tinned copper)
Outer conductor 3. Foil	Aluminium
Sheath	Ø 6,8 mm (PVC, white)
Electrical data	
Impedance	75 Ω
Velocity ratio	0,84
DC resistance inner conductor	21,2 Ω/km
DC resistance outer conductor	11,7 Ω/km
Rated current	8 A
Attenuation 5 MHz	1,3 dB (100 m)
Attenuation 50 MHz	4,1 dB (100 m)
Attentuation 100 MHz	5,9 dB (100 m)
Attentuation 400 MHz	12,0 dB (100 m)
Attentuation 860 MHz	17,9 dB (100 m)
Attenuation 1000 MHz	19,4 dB (100 m)
Attentuation 1400 MHz	23,2 dB (100 m)
Attentuation 2000 MHz	28,2 dB (100 m)
Attentuation 2400 MHz	31,4 dB (100 m)
Attentuation 3000 MHz	35,6 dB (100 m)

Packaging Data	
Sales unit	250 m (Cable ring in plastic foil)
Dimensions (WxHxD) sales unit	210 x 300 x 600 mm
Packaging volume sales unit	dm^3
Gross weight sales unit	0.05 kg
Shipping unit	500 m
Dimensions (WxHxD) shipping unit	380 x 210 x 600 mm
Packaging volume shipping package	47,88

The MK 96 A 0250 is a 75 Ohm coaxial cable for the in-house installation. The high-quality materials and the triple shielding, with a screening efficiency of >120 dB, guarantees an interference free transmission in distribution systems for cable TV, terrestrial and satellite signals. The MK 96 A is approved by Vodafone Kabel Deutschland and perfect for the installation in return path capable multimedia networks. The inner conductor consists of pure copper enabling perfect electrical values and a high reliability. With the fire protection class Dca, s3, d2, a3 the MK 96 A complies with the Construction Products Regulation (CPR) EU No. 305/2011. The PVC outer sheath is installation friendly and compatible with the WISI connector system as well as commercially available connection accessories.

Installation cable

MK 96 A 0252

Coaxial cable 120 dB, Ø 6,8 mm, Length 250 m, PVC white, in COAXBox dispenser carton

KLASSE A CLASS

characteristics

- Screening class A+ (EN 50117-2-4)
- Screening efficiency >120 dB
- Triple shielded, bonded outer foil enables easy connector assembly
- Fulfills fire protection class Dca, s3, d2, a3 (EN 50575)
- Approved by Vodafone Kabel Deutschland

Technical Data	
General data	
Installation	Indoor installation
Screening factor	Class A+, according to EN 50117-2-4
Color	White
Length	250 m
Reaction to fire	Dca, s3, d2, a3, according to BauPVO (EN 50117)
Construction	
Screening construction	3-way
Inner conductor	Ø 1,02 mm (Cu)
Insulation	Ø 4,7 mm (Foam PE, gas injected)
Outer conductor 1. Foil	Ø 4,85 mm (Al-Pet bonded)
Outer conductor 2. Braid	63 % (optical coating, tinned copper)
Outer conductor 3. Foil	Aluminium
Sheath	Ø 6,8 mm (PVC, white)
Electrical data	
Impedance	75 Ω
Velocity ratio	0,84
DC resistance inner conductor	21,2 Ω/km
DC resistance outer conductor	11,7 Ω/km
Rated current	8 A
Attenuation 5 MHz	1,3 dB (100 m)
Attenuation 50 MHz	4,1 dB (100 m)
Attentuation 100 MHz	5,9 dB (100 m)
Attentuation 400 MHz	12,0 dB (100 m)
Attentuation 860 MHz	17,9 dB (100 m)
Attenuation 1000 MHz	19,4 dB (100 m)
Attentuation 1400 MHz	23,2 dB (100 m)
Attentuation 2000 MHz	28,2 dB (100 m)
Attentuation 2400 MHz	31,4 dB (100 m)
Attentuation 3000 MHz	35,6 dB (100 m)

Packaging Data	
Sales unit	250 m (COAXBox carton)
Dimensions (WxHxD) sales unit	370 x 370 x 260 mm
Packaging volume sales unit	dm^3
Gross weight sales unit	0.055 kg
Shipping unit	600 m
Dimensions (WxHxD) shipping unit	mm
Packaging volume shipping package	

The MK 96 A 0252 is a 75 Ohm coaxial cable for the in-house installation. The high-quality materials and the triple shielding, with a screening efficiency of >120 dB, guarantees an interference free transmission in distribution systems for cable TV, terrestrial and satellite signals. The MK 96 A is approved by Vodafone Kabel Deutschland and perfect for the installation in return path capable multimedia networks. The inner conductor consists of pure copper enabling perfect electrical values and a high reliability. With the fire protection class Dca, s3, d2, a3 the MK 96 A complies with the Construction Products Regulation (CPR) EU No. 305/2011. The PVC outer sheath is installation friendly and compatible with the WISI connector system as well as commercially available connection accessories.

Installation cable

MK 96 A 0500

Coaxial cable 120 dB, Ø 6,8 mm, Length 500 m, PVC white, on plastic drum

KLASSE A CLASS

characteristics

- Screening class A+ (EN 50117-2-4)
- Screening efficiency >120 dB
- Triple shielded, bonded outer foil enables easy connector assembly
- Fulfills fire protection class Dca, s3, d2, a3 (EN 50575)
- Approved by Vodafone Kabel Deutschland

Technical Data	
General data	
Installation	Indoor installation
Screening factor	Class A+, according to EN 50117-2-4
Color	White
Length	500 m
Reaction to fire	Dca, s3, d2, a3, according to BauPVO (EN 50117)
Construction	
Screening construction	3-way
Inner conductor	Ø 1,02 mm (Cu)
Insulation	Ø 4,7 mm (Foam PE, gas injected)
Outer conductor 1. Foil	Ø 4,85 mm (Al-Pet bonded)
Outer conductor 2. Braid	63 % (optical coating, tinned copper)
Outer conductor 3. Foil	Aluminium
Sheath	Ø 6,8 mm (PVC, white)
Electrical data	
Impedance	75 Ω
Velocity ratio	0,84
DC resistance inner conductor	21,2 Ω/km
DC resistance outer conductor	11,7 Ω/km
Rated current	8 A
Attenuation 5 MHz	1,3 dB (100 m)
Attenuation 50 MHz	4,1 dB (100 m)
Attentuation 100 MHz	5,9 dB (100 m)
Attentuation 400 MHz	12,0 dB (100 m)
Attentuation 860 MHz	17,9 dB (100 m)
Attenuation 1000 MHz	19,4 dB (100 m)
Attentuation 1400 MHz	23,2 dB (100 m)
Attentuation 2000 MHz	28,2 dB (100 m)
Attentuation 2400 MHz	31,4 dB (100 m)
Attentuation 3000 MHz	35,6 dB (100 m)

Packaging Data	
Sales unit	500 m (plastic drum)
Dimensions (WxHxD) sales unit	340 x 400 x 400 mm
Packaging volume sales unit	54.4 dm³
Gross weight sales unit	0.049 kg
Shipping unit	500 m
Dimensions (WxHxD) shipping unit	400 x 340 x 400 mm
Packaging volume shipping package	54,4

The MK 96 A 0500 is a 75 Ohm coaxial cable for the in-house installation. The high-quality materials and the triple shielding, with a screening efficiency of >120 dB, guarantees an interference free transmission in distribution systems for cable TV, terrestrial and satellite signals. The MK 96 A is approved by Vodafone Kabel Deutschland and perfect for the installation in return path capable multimedia networks. The inner conductor consists of pure copper enabling perfect electrical values and a high reliability. With the fire protection class Dca, s3, d2, a3 the MK 96 A complies with the Construction Products Regulation (CPR) EU No. 305/2011. The PVC outer sheath is installation friendly and compatible with the WISI connector system as well as commercially available connection accessories

Installation cable

MK 99 S 0102

Coaxial cable 100 dB, Ø 6,5 mm, Length 100 m, PE black, on plastic drum

KLASSE A CLASS

characteristics

- Screening class A (EN 50117-2-4)
- Screening efficiency >100 dB
- UV-resistant PE outer jacket for outdoor installation
- Triple shielded, bonded outer foil enables easy connector assembly
- Fulfills fire protection class Fca (EN 50575)
- Easy mounting withWISI connector systems (DV55, DV 85)

Technical Data	
General data	
Installation	Außeninstallation
Screening factor	Class A, according to EN 50117-2-4
Color	black
Length	100 m
Reaction to fire	Fca, according to BauPVO (EN 50117)
Construction	
Screening construction	3-way
Inner conductor	Ø 1,02 mm (Cu)
Insulation	Ø 4,8 mm (Foam PE, gas injected)
Outer conductor 1. Foil	Ø 4,85 mm (AL/PET/AL bonded)
Outer conductor 2. Braid	44 %
Outer conductor 3. Foil	AL/PET
Sheath	Ø 6,5 mm (PE, black)
Electrical data	
Impedance	75 Ω
Velocity ratio	0,84
DC resistance inner conductor	<21,5 Ω/km
DC resistance outer conductor	<32 Ω/km
Rated current	8 A
Attenuation 5 MHz	1,6 dB (100 m)
Attenuation 50 MHz	4,1 dB (100 m)
Attentuation 100 MHz	5,9 dB (100 m)
Attentuation 400 MHz	12,0 dB (100 m)
Attentuation 860 MHz	17,8 dB (100 m)
Attenuation 1000 MHz	19,4 dB (100 m)
Attentuation 1400 MHz	23,2 dB (100 m)
Attentuation 2000 MHz	28,2 dB (100 m)
Attentuation 2400 MHz	31,2 dB (100 m)
Attentuation 3000 MHz	34,5 dB (100 m)

Packaging Data	
Sales unit	100 m (plastic drum)
Dimensions (WxHxD) sales unit	340 x 400 x 400 mm
Packaging volume sales unit	dm^3
Gross weight sales unit	0.037 kg
Shipping unit	m
Dimensions (WxHxD) shipping unit	mm
Packaging volume shipping package	

The MK 99 S 0102 is a 75 Ohm coaxial cable with a pure inner conductor for the outdoor installation. The UV stable PE outer sheat enables a long life span, even at direct sunlight. The high-quality materials and the triple shielding, with a screening efficiency of >100 dB, guarantees an interference free transmission. The MK 99 S is ideal for the use in SAT-IF and terrestrial distribution systems, where the point of reception is out of the building. With the fire protection class Fca, the MK 99 S complies with the Construction Products Regulation (CPR) EU No. 305/2011. The PE outer sheath is installation friendly and compatible with the WISI connector system (DV 55, DV 85) as well as commercially available connection accessories.

Installation cable

MK 99 S 0252

Coaxial cable 100 dB, Ø 6,5 mm, Length 250 m, PE black, in COAXBox dispenser carton

characteristics

- Exceeds Class A (EN 50117-2-4)
- Screening efficiency >100 dB
- UV-resistant PE outer jacket for outdoor installation
- Triple shielded, bonded outer foil enables easy connector assembly
- Fulfills fire protection class Fca (EN 50575)
- Easy mounting withWISI connector systems (DV55, DV 85)

KLASSE A CLASS

Technical Data	
General data	
Installation	Außeninstallation
Screening factor	Class A, according to EN 50117-2-4
Color	black
Length	250 m
Reaction to fire	Fca, according to BauPVO (EN 50117)
Construction	
Screening construction	3-way
Inner conductor	Ø 1,02 mm (Cu)
Insulation	Ø 4,8 mm (Foam PE, gas injected)
Outer conductor 1. Foil	Ø 4,85 mm (AL/PET/AL bonded)
Outer conductor 2. Braid	44 %
Outer conductor 3. Foil	AL/PET
Sheath	Ø 6,5 mm (PE, black)
Electrical data	
Impedance	75 Ω
Velocity ratio	0,84
DC resistance inner conductor	<21,5 Ω/km
DC resistance outer conductor	<32 Ω/km
Rated current	8 A
Attenuation 5 MHz	1,6 dB (100 m)
Attenuation 50 MHz	4,1 dB (100 m)
Attentuation 100 MHz	5,9 dB (100 m)
Attentuation 400 MHz	12,0 dB (100 m)
Attentuation 860 MHz	17,8 dB (100 m)
Attenuation 1000 MHz	19,4 dB (100 m)
Attentuation 1400 MHz	23,2 dB (100 m)
Attentuation 2000 MHz	28,2 dB (100 m)
Attentuation 2400 MHz	31,2 dB (100 m)
Attentuation 3000 MHz	34,5 dB (100 m)

Packaging Data	
Sales unit	100 m (plastic drum)
Dimensions (WxHxD) sales unit	400 x 400 x 340 mm
Packaging volume sales unit	dm^3
Gross weight sales unit	0.037 kg
Shipping unit	m
Dimensions (WxHxD) shipping unit	mm
Packaging volume shipping package	

The MK 99 S 0252 is a 75 Ohm coaxial cable with a pure inner conductor for the outdoor installation. The UV stable PE outer sheat enables a long life span, even at direct sunlight. The high-quality materials and the triple shielding, with a screening efficiency of >100 dB, guarantees an interference free transmission. The MK 99 S is ideal for the use in SAT-IF and terrestrial distribution systems, where the point of reception is out of the building. With the fire protection class Fca, the MK 99 S complies with the Construction Products Regulation (CPR) EU No. 305/2011. The PE outer sheath is installation friendly and compatible with the WISI connector system (DV 55, DV 85) as well as commercially available connection accessories.

Installation cable

MK 99 S 0502

Coaxial cable 100 dB, Ø 6,5 mm, Length 500 m, PE black, on plastic drum

KLASSE A CLASS

characteristics

- Exceeds Class A (EN 50117-2-4)
- Screening efficiency >100 dB
- UV-resistant PE outer jacket for outdoor installation
- Triple shielded, bonded outer foil enables easy connector assembly
- Fulfills fire protection class Fca (EN 50575)
- Easy mounting withWISI connector systems (DV55, DV 85)

Technical Data	
General data	
Installation	Außeninstallation
Screening factor	Class A, according to EN 50117-2-4
Color	black
Length	500 m
Reaction to fire	Fca, according to BauPVO (EN 50117)
Construction	
Screening construction	3-way
Inner conductor	Ø 1,02 mm (Cu)
Insulation	Ø 4,8 mm (Foam PE, gas injected)
Outer conductor 1. Foil	Ø 4,85 mm (AL/PET/AL bonded)
Outer conductor 2. Braid	44 %
Outer conductor 3. Foil	AL/PET
Sheath	Ø 6,5 mm (PE, black)
Electrical data	
Impedance	75 Ω
Velocity ratio	0,84
DC resistance inner conductor	<21,5 Ω/km
DC resistance outer conductor	<32 Ω/km
Rated current	8 A
Attenuation 5 MHz	1,6 dB (100 m)
Attenuation 50 MHz	4,1 dB (100 m)
Attentuation 100 MHz	5,9 dB (100 m)
Attentuation 400 MHz	12,0 dB (100 m)
Attentuation 860 MHz	17,8 dB (100 m)
Attenuation 1000 MHz	19,4 dB (100 m)
Attentuation 1400 MHz	23,2 dB (100 m)
Attentuation 2000 MHz	28,2 dB (100 m)
Attentuation 2400 MHz	31,2 dB (100 m)
Attentuation 3000 MHz	34,5 dB (100 m)

Packaging Data	
Sales unit	100 m (plastic drum)
Dimensions (WxHxD) sales unit	400 x 400 x 340 mm
Packaging volume sales unit	dm^3
Gross weight sales unit	0.037 kg
Shipping unit	m
Dimensions (WxHxD) shipping unit	mm
Packaging volume shipping package	

The MK 99 S 0502 is a 75 Ohm coaxial cable with a pure inner conductor for the outdoor installation. The UV stable PE outer sheat enables a long life span, even at direct sunlight. The high-quality materials and the triple shielding, with a screening efficiency of >100 dB, guarantees an interference free transmission. The MK 99 S is ideal for the use in SAT-IF and terrestrial distribution systems, where the point of reception is out of the building. With the fire protection class Fca, the MK 99 S complies with the Construction Products Regulation (CPR) EU No. 305/2011. The PE outer sheath is installation friendly and compatible with the WISI connector system (DV 55, DV 85) as well as commercially available connection accessories.

Halogen-free cable

MK 96 AL 100

Coaxial cable halogenfree 120 dB, Ø 6,8 mm, Length 100 m, PE-LSZH white, Cable ring in plastic foil

KLASSE A CLASS

characteristics

- Exceeds Class A+ (EN 50117-2-4), Screening efficiency > 120 dB
- Halogen free PE outer sheath (LSZH)
- Triple shielded, bonded outer foil enables easy connector assembly
- Fulfills fire protection class Dca, s1, d2, a1 (EN 50575)
- Length indication at the outer sheath

Technical Data	
General data	
Installation	Indoor installation
Screening factor	Class A+, according to EN 50117-2-4
Color	White
Length	100 m
Reaction to fire	Dca, s1, d2, a1, according to BauPVO (EN 50575)
Construction	
Screening construction	3-way
Inner conductor	Ø 1,02 mm (Cu)
Insulation	Ø 4,7 mm (Foam PE, gas injected)
Outer conductor 1. Foil	Ø 4,85 mm (Al-Pet bonded)
Outer conductor 2. Braid	63 % (optical coating, tinned copper)
Outer conductor 3. Foil	Aluminium
Sheath	Ø 6,8 mm (PE-LSZH, white)
Electrical data	
Impedance	75 Ω
Velocity ratio	0,84
DC resistance inner conductor	21,2 Ω/km
DC resistance outer conductor	11,7 Ω/km
Rated current	8 A
Attenuation 5 MHz	1,3 dB (100 m)
Attenuation 50 MHz	4,1 dB (100 m)
Attentuation 100 MHz	5,9 dB (100 m)
Attentuation 400 MHz	12,0 dB (100 m)
Attentuation 860 MHz	17,9 dB (100 m)
Attenuation 1000 MHz	19,4 dB (100 m)
Attentuation 1400 MHz	23,2 dB (100 m)
Attentuation 2000 MHz	28,2 dB (100 m)
Attentuation 2400 MHz	31,4 dB (100 m)
Attentuation 3000 MHz	35,6 dB (100 m)

Packaging Data	
Sales unit	100 m (Cable ring in plastic foil)
Dimensions (WxHxD) sales unit	415 x 525 x 265 mm
Packaging volume sales unit	dm^3
Gross weight sales unit	0.047 kg
Shipping unit	600 m
Dimensions (WxHxD) shipping unit	265 x 415 x 525 mm
Packaging volume shipping package	57,74

The MK 96 AL 100 is a halogen free 75 Ohm coaxial cable for the in-house installation with specific safety requirements concerning fire protection and smoke emission. The high-quality materials and the triple shielding with a screening efficiency of >120 dB guarantee an interference free transmission in distribution systems for cable TV, terrestrial and satellite signals. The MK 96 AL is approved by Vodafone Kabel Deutschland and perfect for the installation in return path capable multimedia networks. The inner conductor consists of pure copper enabling perfect electrical values and a high reliability. With the fire protection class Dca, s1, d2, a1 the MK 96 AL complies with the Construction Products Regulation (CPR) EU No. 305/2011. The PE outer sheath with LSZH (Low smoke zero halogen) compound is installation friendly and compatible with the WISI connector system as well as commercially available connection accessories.

Halogen-free cable

MK 96 AL 252

Coaxial cable halogenfree 120 dB, Ø 6,8 mm, Length 250 m, PE-LSZH white, COAXBox dispenser carton

KLASSE A CLASS

characteristics

- Exceeds Class A+ (EN 50117-2-4), Screening efficiency > 120 dB
- Halogen free PE outer sheath (LSZH)
- Triple shielded, bonded outer foil enables easy connector assembly
- Fulfills fire protection class Dca, s1, d2, a1 (EN 50575)
- Approved by Vodafone Kabel Deutschland

Technical Data	
General data	
Installation	Indoor installation
Screening factor	Class A+, according to EN 50117-2-4
Color	White
Length	250 m
Reaction to fire	Dca, s1, d2, a1, according to BauPVO (EN 50575)
Construction	
Screening construction	3-way
Inner conductor	Ø 1,02 mm (Cu)
Insulation	Ø 4,7 mm (Foam PE, gas injected)
Outer conductor 1. Foil	Ø 4,85 mm (Al-Pet bonded)
Outer conductor 2. Braid	63 % (optical coating, tinned copper)
Outer conductor 3. Foil	Aluminium
Sheath	Ø 6,8 mm (PE-LSZH, white)
Electrical data	
Impedance	75 Ω
Velocity ratio	0,84
DC resistance inner conductor	21,2 Ω/km
DC resistance outer conductor	11,7 Ω/km
Rated current	8 A
Attenuation 5 MHz	1,3 dB (100 m)
Attenuation 50 MHz	4,1 dB (100 m)
Attentuation 100 MHz	5,9 dB (100 m)
Attentuation 400 MHz	12,0 dB (100 m)
Attentuation 860 MHz	17,9 dB (100 m)
Attenuation 1000 MHz	19,4 dB (100 m)
Attentuation 1400 MHz	23,2 dB (100 m)
Attentuation 2000 MHz	28,2 dB (100 m)
Attentuation 2400 MHz	31,4 dB (100 m)
Attentuation 3000 MHz	35,6 dB (100 m)

Packaging Data	
Sales unit	250 m (COAXBox carton)
Dimensions (WxHxD) sales unit	370 x 370 x 255 mm
Packaging volume sales unit	34.64 dm³
Gross weight sales unit	0.05 kg
Shipping unit	250 m
Dimensions (WxHxD) shipping unit	365 x 260 x 365 mm
Packaging volume shipping package	34,64

The MK 96 AL 0100 is a halogen free 75 Ohm coaxial cable for the in-house installation with specific safety requirements concerning fire protection and smoke emission. The high-quality materials and the triple shielding with a screening efficiency of >120 dB guarantee an interference free transmission in distribution systems for cable TV, terrestrial and satellite signals. The MK 96 AL is approved by Vodafone Kabel Deutschland and perfect for the installation in return path capable multimedia networks. The inner conductor consists of pure copper enabling perfect electrical values and a high reliability. With the fire protection class Dca, s1, d2, a1 the MK 96 AL complies with the Construction Products Regulation (CPR) EU No. 305/2011. The PE outer sheath with LSZH (Low smoke zero halogen) compound is installation friendly and compatible with the WISI connector system as well as commercially available connection accessories.

Halogen-free cable

MK 96 AL 500

Coaxial cable halogenfree 120 dB, Ø 6,8 mm, Length 500 m, PE-LSZH white, on plastic drum

KLASSE A CLASS

characteristics

- Exceeds Class A+ (EN 50117-2-4), Screening efficiency > 120 dB
- Halogen free PE outer sheath (LSZH)
- Triple shielded, bonded outer foil enables easy connector assembly
- Fulfills fire protection class Dca, s1, d2, a1 (EN 50575)
- Approved by Vodafone Kabel Deutschland

Technical Data	
General data	
Installation	Indoor installation
Screening factor	Class A+, according to EN 50117-2-4
Color	White
Length	500 m
Reaction to fire	Dca, s1, d2, a1, according to BauPVO (EN 50575)
Construction	
Screening construction	3-way
Inner conductor	Ø 1,02 mm (Cu)
Insulation	Ø 4,7 mm (Foam PE, gas injected)
Outer conductor 1. Foil	Ø 4,85 mm (Al-Pet bonded)
Outer conductor 2. Braid	63 % (optical coating, tinned copper)
Outer conductor 3. Foil	Aluminium
Sheath	Ø 6,8 mm (PE-LSZH, white)
Electrical data	
Impedance	75 Ω
Velocity ratio	0,84
DC resistance inner conductor	21,2 Ω/km
DC resistance outer conductor	11,7 Ω/km
Rated current	8 A
Attenuation 5 MHz	1,3 dB (100 m)
Attenuation 50 MHz	4,1 dB (100 m)
Attentuation 100 MHz	5,9 dB (100 m)
Attentuation 400 MHz	12,0 dB (100 m)
Attentuation 860 MHz	17,9 dB (100 m)
Attenuation 1000 MHz	19,4 dB (100 m)
Attentuation 1400 MHz	23,2 dB (100 m)
Attentuation 2000 MHz	28,2 dB (100 m)
Attentuation 2400 MHz	31,4 dB (100 m)
Attentuation 3000 MHz	35,6 dB (100 m)

Packaging Data	
Sales unit	500 m (plastic drum)
Dimensions (WxHxD) sales unit	340 x 400 x 400 mm
Packaging volume sales unit	54.4 dm³
Gross weight sales unit	0.051 kg
Shipping unit	500 m
Dimensions (WxHxD) shipping unit	400 x 340 x 400 mm
Packaging volume shipping package	54,4

The MK 96 AL 500 is a halogen free 75 Ohm coaxial cable for the in-house installation with specific safety requirements concerning fire protection and smoke emission. The high-quality materials and the triple shielding with a screening efficiency of >120 dB guarantee an interference free transmission in distribution systems for cable TV, terrestrial and satellite signals. The MK 96 AL is approved by Vodafone Kabel Deutschland and perfect for the installation in return path capable multimedia networks. The inner conductor consists of pure copper enabling perfect electrical values and a high reliability. With the fire protection class Dca, s1, d2, a1 the MK 96 AL complies with the Construction Products Regulation (CPR) EU No. 305/2011. The PE outer sheath with LSZH (Low smoke zero halogen) compound is installation friendly and compatible with the WISI connector system as well as commercially available connection accessories.

Satellite receiving systems

WISI SAT antennas:
Perfect reception in all weather conditions.

corrosion-resistant reflector made of aluminium, powder-coated

for discreet installation, available in **three colours**

Feed holder made of die-cast aluminium

with optional multifeed rail expandable for up to 4 LNBs

Cable management for visually attractive installation

simple assembly of the reflector due to suspension clip

Reinforced back for more stability

WISI TOPLINE antennas are corrosion free and absolutely weatherproof. Due to the excellent material and the precise manufacturing, the antennas do not bend even under extreme temperature fluctuations. This guarantees a stable reception in almost all weather conditions.

It goes without saying that WISI TOPLINE antennas are extremely easy to assemble, highly resilient, durable, recyclable and designed for state-of-the-art technologies. Simply the best WISI antenna technology has to offer.

WISI feed systems can be used universally in all antennas with a 40 mm mounting diameter. They are easy to adjust and with duo feed holders suitable for reception of two neighbouring orbital positions.

WISI feed systems are characterized by a highly linear performance over the complete frequency range. They are low-noise and energy-saving. Every WISI power supply system is subjected to a careful final test in the laboratory - for long, clear reception.

The special construction and the retractable weather protection cap provide protection against weather influences, even after many years.

Parabol offset antennas

OA 10 A

Orbit Line parabol offset antenna, 100 cm, light grey

Technical Data	
Gain	39,8...40,9 dB
Aperture angle	<1,8 ° (3 dB)
Windloading at 72 km/h	294 N
Windloading at 144 km/h	1167 N
Windloading at 216 km/h	2628 N
General data	
Reflector material	Aluminium
Reflector colour	Light grey (RAL 7035)
Diameter	100 cm
Mounting clip	32...76 mm
Setting range elevation	5...90 °
Weight	8,8 kg

characteristics

- Ø 100 cm
- Light grey (RAL 7035)
- Pluggable aluminum feed arm
- 40 mm aluminum feed holder
- Easy and quick installation thanks to the pre-mounted back part
- Corrosion resistant aluminum reflector powder-coated

The OA 10 A offset antenna convinces by its easy installation and low weight. The reflector, feed arm and LNB holder consists of light and weather resistant aluminum. The stabile back part is pre-mounted to the reflector and enables an installation in a few steps. For the Installation is an antenna pipe MN 60A or wall holder MN xx available. Multifeed reception can be realized by using the optional multi feed bar OF85 0002 or OF85 0004.

OA 13 A

Orbit Line parabol offset antenna, 125 cm, light grey

Technical Data	
Gain	43 dB (12 GHz)
Aperture angle	<1,37 ° (3 dB)
Windloading at 120 Km/h	1588 N
Offset angle	21,3°
General data	
Reflector material	Aluminium, powder-coated
Reflector colour	Light grey (RAL 7035)
Diameter	125 cm
Mounting clip	55...100 mm
Setting range elevation	20...50 °
Weight	12,8 kg

characteristics

- Ø 125 cm
- Light grey (RAL 7035)
- Feedholder 40 mm
- easy installation of the reflector
- Corrosion resistant aluminum reflector powder-coated

Aluminium offset antennas , light-grey. Hot zinc dipped fastening in reflector colour, powder-coated.

HIBER AV

Parabol offset antennas

characteristics

- Ø 85 cm
- Light grey (RAL 7035)
- Feedholder 40 mm
- easy installation of the reflector
- Corrosion resistant aluminum reflector powder-coated

OA 85 G

Orbit Topline parabol offset antenna, 85 cm, light grey

OA 85 H

Orbit Topline Parabol offset antenna, 85 cm, basalt grey

OA 85 I

Orbit Topline Parabol offset antenna, 85 cm, red brown

Technical Data			
Gain	37 dB (12 GHz)	37 dB (12 GHz)	37 dB (12 GHz)
Aperture angle	<2,2 ° (3 dB)	<2,2 ° (3 dB)	<2,2 ° (3 dB)
Windloading at 72 km/h	167 N	167 N	167 N
Windloading at 144 km/h	677 N	677 N	677 N
Windloading at 216 km/h	1530 N	1530 N	1530 N
General data			
Reflector material	Aluminium, powder-coated	Aluminium, powder-coated	Aluminium, powder-coated
Reflector colour	Light grey (RAL 7035)	Basalt grey (RAL 7012)	red brown (RAL 8012)
Diameter	85 cm	85 cm	85 cm
Mounting clip	32...76 mm	32...76 mm	32...76 mm
Setting range elevation	0...90 °	0...90 °	0...90 °
Weight	5,8 kg	5,8 kg	5,8 kg

HIPER ANTENNA

Parabol offset antennas

characteristics

- Ø 60 cm
- Feedholder 40 mm
- easy installation of the reflector
- Corrosion resistant aluminum reflector powder-coated

OA 36 G

Orbit Line parabol offset antenna, 60 cm, light grey

OA 36 H

Orbit Line Parabol offset antenna, 60 cm, basalt grey

OA 36 I

Orbit Line Parabol offset antenna, 60 cm, red brown

Technical Data			
Gain	35 dB	35 dB	35 dB
Aperture angle	<3,0 ° (3 dB)	<3,0 ° (3 dB)	<3,0 ° (3 dB)
Wind load up to 20m mounting height	280 N	280 N	280 N
General data			
Reflector material	Aluminium, powder-coated	Aluminium, powder-coated	Aluminium, powder-coated
Reflector colour	Light grey (RAL 7035)	Basalt grey (RAL 7012)	red brown (RAL 8012)
Diameter	60 cm	60 cm	60 cm
Mounting clip	32...60 mm	32...60 mm	32...60 mm
Setting range elevation	16...50 °	16...50 °	16...50 °
Weight	1,6 kg	1,6 kg	1,6 kg

characteristics

- Ø 80 cm
- 40 mm aluminum feed holder
- easy installation of the reflector
- Corrosion resistant aluminum reflector powder-coated

OA 38 G

Orbit Line parabol offset antenna, 80 cm, light grey

OA 38 H

Orbit Line Parabol offset antenna, 80 cm, basalt grey

OA 38 I

Orbit Line Parabol offset antenna, 80 cm, red brown

Technical Data			
Gain	37 dB	37 dB	37 dB
Aperture angle	<2,5 ° (3 dB)	<2,5 ° (3 dB)	<2,5 ° (3 dB)
Wind load up to 20m mounting height	525 N	525 N	525 N
General data			
Reflector material	Aluminium, powder-coated	Aluminium, powder-coated	Aluminium, powder-coated
Reflector colour	Light grey (RAL 7035)	Basalt grey (RAL 7012)	red brown (RAL 8012)
Diameter	80 cm	80 cm	80 cm
Mounting clip	32...60 mm	32...60 mm	32...60 mm
Setting range elevation	16...50 °	16...50 °	16...50 °
Weight	3,8 kg	3,8 kg	3,8 kg

ORDER ALL

Feed systems

OC 01 E

Universal feed system, Single, light grey, feed diameter 40 mm

OC 02 E

Universal feed system, Twin, light grey, feed diameter 40 mm

OC 04 E

Universal feed system, Quattro, light grey, feed diameter 40 mm

OC 06 E

Universal feed system, Quad, light grey, feed diameter 40 mm

characteristics

- UV-resistant housing in light grey
- Extendible weather protection
- Reception of DVB-S/S2/S2X
- 4G/LTE safe
- Very low noise figure

Technical Data				
Electrical data				
Input frequency	10,70...12,75 GHz	10,70...12,75 GHz	10,70...12,75 GHz	10,70...12,75 GHz
Oscillator frequency low band	9,75 GHz	9,75 GHz	9,75 GHz	9,75 GHz
Oscillator frequency high band	10,6 GHz	10,6 GHz	10,6 GHz	10,6 GHz
Switching voltage vertical	11...14 V DC	11...14 V DC	11...14 V DC	11...14 V DC
Switching voltage horizontal	16...20 V DC	16...20 V DC	16...20 V DC	16...20 V DC
Output frequency	950...2150 MHz	950...2150 MHz	950...2150 MHz	950...2150 MHz
Gain	>55 dB	>55 dB	>55 dB	>55 dB
Ripple	±4 dB	±4 dB	±4 dB	±4 dB
Noise figure	typ. 0,3 dB	typ. 0,3 dB	typ. 0,3 dB	typ. 0,3 dB
Polarization isolation	>22 dB	>22 dB	>22 dB	>22 dB
Image rejection	>40 dB	>40 dB	>40 dB	>40 dB
In band spurious level	max. -60 dBm	max. -60 dBm	max. -60 dBm	max. -60 dBm
L.O. phase noise @ 10 kHz	max. -80 dBc/Hz	max. -80 dBc/Hz	max. -80 dBc/Hz	max. -80 dBc/Hz
L.O. Frequency accuracy @ 25 °C	max. ±500 kHz	max. ±500 kHz	max. ±500 kHz	max. ±500 kHz
L.O. temperature drift @ 25°C	max. ±1,0 MHz	max. ±1,0 MHz	max. ±1,0 MHz	max. ±1,0 MHz
Output impedance	75 Ω	75 Ω	75 Ω	75 Ω
Mechanical Data				
Color	Light grey (RAL 7035)	Light grey (RAL 7035)	Light grey (RAL 7035)	Light grey (RAL 7035)
Feed diameter	40 mm	40 mm	40 mm	40 mm
With protective enclosure	Yes	Yes	Yes	Yes
Connectors				
RF-Output	1x F-female	2x F-female	4x F-female	4x F-female
General data				
Type	Single	Twin	Quattro	Quad
Subscriber	1 pcs.	2 pcs.	Depending on the multiswitch	4 pcs.
Integrated multi switch	Yes	Yes	No	Yes
Terrestrial feed	No	No	No	No
Input voltage	11...20V DC	11...20V DC	11...20V DC	11...20V DC
Current consumption	max. 95mA	max. 120mA	max. 240mA	max. 120mA
Operating Temperature	-30...+60°C	-30...+60°C	-30...+60°C	-30...+60°C
Weight	0.125kg	0.18kg	0,202kg	0.206kg
Dimensions (B)	115mm	138mm	138mm	138mm
Dimensions (H)	77mm	85,5mm	85.5mm	85,5mm
Dimensions (T)	61mm	61mm	61mm	61mm

Accessories parabol offset antennas

OF 85 0002

multifeed bar for 2 feed systems

OF 85 0004

multifeed bar for 4 feed systems

Short description

- multifeed bar for 2 feed systems
- for offset antenna OA 85 G/H/I and OA 38 G/H/I, Ø 40 mm, and OA 100
- Variable alignment to different satellites

Technical Data		
Number feedsystems	2 pcs.	4 pcs.
Type of offset antenna	OA 38, OA 85, OA 10A	OA 38, OA 85, OA 10A
Diameter	40 mm	40 mm
General data		
Color	silver	silver

HIPER ANTENNA

Multiswitch systems PROSWITCH

WISI Multiswitches:

Reliable technology for flexible use.

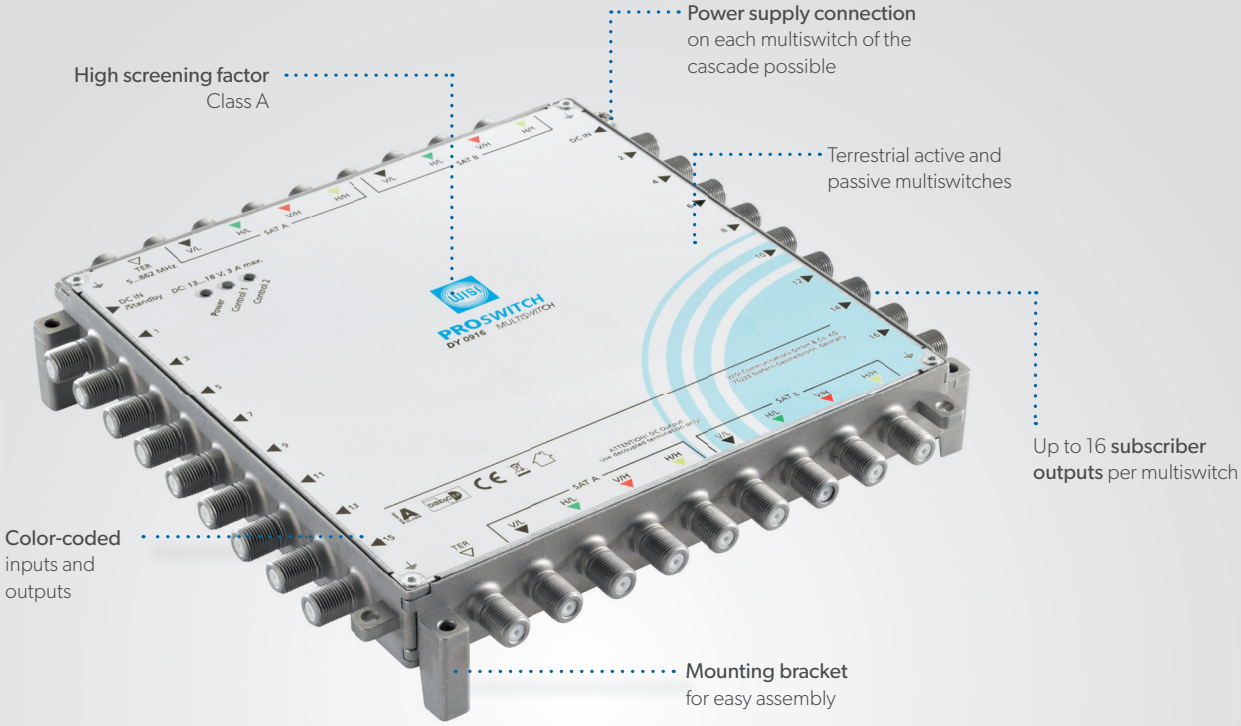

Engineered in Germany

KLASSE A CLASS

Auf einen Blick

- Stand alone multiswitch for the distribution of four SAT polarizations and terrestrial signals
- Quad LNB support for easy expansion of existing equipment
- Active terrestrial branch to distribute DVB-T/T2, DAB and FM without additional amplifier
- Integrated SAT amplifier for low attenuation at the subscriber port
- Pre-correction for compensation of cable slope
- Color coded inputs

Surge protector

DL 400

Surge protector

characteristics

- 4 x SAT protection in one unit, module case sideways stackable for expansion to additional levels
- Over voltage protection for satellite sistribution systems
- Typical operation site between (Quattro) LNB and cascaded multiswitches / headend or for protection of potential differences between dedicated building structures.
- remote power that SAT- trunk line via the lateral F-connector, powering to the output can be switched off
- overvoltage detection with LED- status indicator (only with active power supply)

KLASSE A CLASS

Technical Data	
Connectors	
F socket (SAT / power supply)	8 / 1 pcs.
Frequency range	950...2200 MHz
input level max	115 dBµV
Through loss	1...2 dB
return loss EN60728-3	Class A
Isolation trunk	35 dB (min. typ > 40 dB)
DiSEqC / 22 kHz passage	No
Surge protection	EN 61643-21
Rated leakage current (8/20 µs)	5 kA
Protective level at 10 kA (8/20 µs) Cat. C2	<30 V
Protective level at 1 kV/µs Cat. C3	<30 V
Protective level at 2.5 kV (10/350 µs) Cat. D1	<30 V
Protective level at 6 kV (10/700 µs) Cat. B2	<30 V
Alternating current stability	5 A
Overload error state	1
DC resistance input > output	1 Ω
Highest perm. Voltage Uc	20 V DC
Rated current trunk	1000 mA
General data	
Current rates DC infeed	2500 mA max.
Power consumption	<0,2 W
Operating voltage DC	0...18 V DC
Protection class	IP20
Operating temperature range	0...55 °C
Screen class	A
Dimensions (width x height x depth)	140 x 85 x 38,5 mm
Weight	0,240 kg

Overvoltage protection for SAT distribution facilities as well as protection of SAT inputs at signal processing. With the DL400, all following components are protected from undesirable voltage peaks.

ANTENA

Multiswitch 5 inputs, cascade

DY 0508

PROSWITCH multiswitch 5 in 8, cascade & stand alone, TERR. passive

KLASSE A CLASS

characteristics

- Cascadable multiswitch for the distribution of 4 satellite polarisations and terrestrial signals
- Useable as a stand alone device (DY 70 power supply required)
- Stand-by function with connected power supply, optional permanent operation
- Passive terrestrial path to feed in multimedia content or signals from a cable TV operator
- Integrated SAT amplifier for low insertion loss
- Pre-emphasis to compensate the cable loss at high frequencies
- High screening efficiency according to Class A
- Stackable chassis for space-saving installation of various devices
- Colour-coded inputs and outputs
- Compatible with MagentaTV Sat, DIVEO and freenet TV

Technical Data	
SAT-IF trunk	
Inputs SAT	4 pcs.
Outputs SAT	4 pcs.
Frequency range-SAT	950... 2150 MHz
Through loss SAT	1,1...3 dB
Decoupling SAT -SAT	40 dB typ.
Return loss SAT	>10 dB
Terrestrial trunk	
Inputs TERR	1 pcs.
Outputs TERR	1 pcs.
Frequency range TERR	5... 862 MHz
Through loss TERR	3,5...4,2 dB (±1 dB)
Isolation TERR - SAT	40 dB typ.
Return loss TERR	>15 dB
Subscriber outputs	
Outputs	8 pcs.
Frequency range	5...2150 MHz
TERR type	Passive
Insertion loss SAT	3...-2,2 dB
Insertion TERR	24 dB (±3 dB)
Max. output level subscriber SAT	90 dBµV
Max. output level subscriber TERR	81 dBµV
Return loss subscriber SAT	>10 dB
Return loss subscriber TERR	>14 dB
Control signal	14/18 V, 0/22 kHz, DiSEqC 2.0

Technical Data	
Current consumption from receiver	70 mA
Connectors	
F-female	20 pcs.
DC supply voltage	F-female
Color code	VL = black; HL = green; VH = red; HH = yellow

The DY 0508 is a cascadable multiswitch with five inputs for the distribution of one satellite and terrestrial signals. With the separately power supply DY 70 that powers the LNB, the multiswitch is useable as a stand alone device. The polarisations are available at five cascade outputs for the installation of further multiswitches. Commercially available DVB-S/S2 set-top-boxes or TVs with an integrated receiver can be used at the eight subscriber outputs. Inserted terrestrial signals like DVB-T/T2, DAB or FM are available at each subscriber output as well. The stand-by functionality minimizes power consumption by activating the mulitswitch only in case the connected STB is tuned on.

Multiswitch 5 inputs, cascade

DY 0516

PROSWITCH multiswitch 5 in 16, cascade & stand alone, TERR. passive

KLASSE A CLASS

characteristics

- Cascadable multiswitch for the distribution of 4 satellite polarisations and terrestrial signals
- Useable as a stand alone device (DY 70 power supply required)
- Stand-by function with connected power supply, optional permanent operation
- Passive terrestrial path to feed in multimedia content or signals from a cable TV operator
- Pre-emphasis to compensate the cable loss at high frequencies
- High screening efficiency according to Class A
- Stackable chassis for space-saving installation of various devices

Technical Data	
SAT-IF trunk	
Inputs SAT	4 pcs.
Outputs SAT	4 pcs.
Frequency range-SAT	950... 2150 MHz
Through loss SAT	1,6...4,5 dB
Decoupling SAT -SAT	40 dB typ.
Return loss SAT	>10 dB
Terrestrial trunk	
Inputs TERR	1 pcs.
Outputs TERR	1 pcs.
Frequency range TERR	5...862 MHz
Through loss TERR	3,5...4,2 dB (±1 dB)
Isolation TERR - SAT	40 dB typ.
Return loss TERR	>15 dB
Subscriber outputs	
Outputs	16 pcs.
Frequency range	5...2150 MHz
TERR type	Passive
Insertion loss SAT	3...-2,2 dB
Insertion TERR	24 dB (±3 dB)
Max. output level subscriber SAT	90 dBµV
Max. output level subscriber TERR	81 dBµV
Return loss subscriber SAT	>10 dB
Return loss subscriber TERR	>14 dB
Control signal	14/18 V, 0/22 kHz, DiSEqC 2.0
Current consumption from receiver	100 mA
Connectors	
F-female	28 pcs.
DC supply voltage	F-female
Color code	VL = black; HL = green; VH = red; HH = yellow

Packaging Data	
Sales unit	1 pcs.
Dimensions (WxHxD) sales unit	275 x 200 x 40 mm
Packaging volume sales unit	3.2 dm³
Gross weight sales unit	0.62 kg
Shipping unit	1 pcs.
Dimensions (WxHxD) shipping unit	270 x 170 x 70 mm
Packaging volume shipping package	3,2

The DY 0516 is a cascadable multiswitch with five inputs for the distribution of one satellite and terrestrial signals. With the separately power supply DY 70 that powers the LNB, the multiswitch is useable as a stand alone device. The polarisations are available at five cascade outputs for the installation of further multiswitches. Commercially available DVB-S/S2 set-top-boxes or TVs with an integrated receiver can be used at the 16 subscriber outputs. Inserted terrestrial signals like DVB-T/T2, DAB or FM are available at each subscriber output as well. The stand-by functionality minimizes power consumption by activating the mulitswitch only in case the connected STB is turned on.

Multiswitch 9 inputs, cascade

DY 0908

PROSWITCH multiswitch 9 in 8, cascade & Stand alone, TERR. passive

KLASSE A CLASS

characteristics

- Cascadable multiswitch for the distribution of 8 satellite polarisations and terrestrial signals
- Useable as a stand alone device (DY 70 power supply required)
- Stand-by function with connected power supply, optional permanent operation
- Passive terrestrial path to feed in multimedia content or signals from a cable TV operator
- Integrated SAT amplifier for low insertion loss
- Pre-emphasis to compensate the cable loss at high frequencies
- High screening efficiency according to Class A
- Stackable chassis for space-saving installation of various devices
- Colour-coded inputs and outputs
- Compatible with MagentaTV Sat, DIVEO and freenet TV

Technical Data	
SAT-IF trunk	
Inputs SAT	8 pcs.
Outputs SAT	8 pcs.
Frequency range-SAT	950...2150 MHz
Through loss SAT	1,1...3 dB
Decoupling SAT -SAT	40 dB typ.
Return loss SAT	>10 dB
Terrestrial trunk	
Inputs TERR	1 pcs.
Outputs TERR	1 pcs.
Frequency range TERR	5...862 MHz
Through loss TERR	3,5...4,2 dB (±1 dB)
Isolation TERR - SAT	40 dB typ.
Return loss TERR	>15 dB
Subscriber outputs	
Outputs	8 pcs.
Frequency range	5...2150 MHz
TERR type	Passive
Insertion loss SAT	3...-2,2 dB
Insertion TERR	24 dB
Max. output level subscriber SAT	90 dBµV
Max. output level subscriber TERR	81 dBµV (passive)
Return loss subscriber SAT	>10 dB
Return loss subscriber TERR	>14 dB
Control signal	14/18 V, 0/22 kHz, DiSEqC 2.0
Current consumption from receiver	70 mA
Connectors	
F-female	28 pcs.
DC supply voltage	F-female
Color code	VL = black; HL = green; VH = red; HH = yellow

Packaging Data	
Sales unit	1 pcs.
Dimensions (WxHxD) sales unit	275 x 200 x 42 mm
Packaging volume sales unit	3.2 dm³
Gross weight sales unit	0.61 kg
Shipping unit	1 pcs.
Dimensions (WxHxD) shipping unit	270 x 170 x 70 mm
Packaging volume shipping package	3,2

The DY 0908 is a cascadable multiswitch with nine inputs for the distribution of two satellites and terrestrial signals. With the separately power supply DY 70 that powers the LNB, the multiswitch is useable as a stand alone device. The polarisations are available at nine cascade outputs for the installation of further multiswitches. Commercially available DVB-S/S2 set-top-boxes or TVs with an integrated receiver can be used at the eight subscriber outputs. Inserted terrestrial signals like DVB-T/T2, DAB or FM are available at each subscriber output as well. The stand-by functionality minimizes power consumption by activating the mulitswitch only in case the connected STB is turned on.

Multiswitch 9 inputs, cascade

DY 0916

PROSWITCH multiswitch 9 in 16, cascade & Stand alone, TERR. passive

KLASSE A CLASS

characteristics

- Cascadable multiswitch for the distribution of 8 satellite polarisations and terrestrial signals
- Useable as a stand alone device (DY 70 power supply required)
- Stand-by function with connected power supply, optional permanent operation
- Passive terrestrial path to feed in multimedia content or signals from a cable TV operator
- Integrated SAT amplifier for low insertion loss
- Pre-emphasis to compensate the cable loss at high frequencies
- High screening efficiency according to Class A
- Stackable chassis for space-saving installation of various devices
- Colour-coded inputs and outputs
- Compatible with MagentaTV Sat, DIVEO and freenet TV

Technical Data	
SAT-IF trunk	
Inputs SAT	8 pcs.
Outputs SAT	8 pcs.
Frequency range-SAT	950...2150 MHz
Through loss SAT	1,6...4,5 dB
Decoupling SAT -SAT	40 dB typ.
Return loss SAT	>10 dB
Terrestrial trunk	
Inputs TERR	1 pcs.
Outputs TERR	1 pcs.
Frequency range TERR	5...862 MHz
Through loss TERR	3,5...4,2 dB (±1 dB)
Isolation TERR - SAT	40 dB typ.
Return loss TERR	>15 dB
Subscriber outputs	
Outputs	16 pcs.
Frequency range	5...2150 MHz
TERR type	Passive
Insertion loss SAT	3...-2,2 dB
Insertion TERR	24 dB (±3 dB)
Max. output level subscriber SAT	90 dBµV
Max. output level subscriber TERR	81 dBµV (passive)
Return loss subscriber SAT	>10 dB
Return loss subscriber TERR	>14 dB
Control signal	14/18 V, 0/22 kHz, DiSEqC 2.0
Current consumption from receiver	50 mA
Connectors	
F-female	36 pcs.
DC supply voltage	F-female
Color code	VL = black; HL = green; VH = red; HH = yellow

Packaging Data	
Sales unit	1 pcs.
Dimensions (WxHxD) sales unit	275 x 265 x 40 mm
Packaging volume sales unit	3.2 dm³
Gross weight sales unit	0.86 kg
Shipping unit	1 pcs.
Dimensions (WxHxD) shipping unit	270 x 170 x 70 mm
Packaging volume shipping package	3,2

The DY 0916 is a cascadable multiswitch with nine inputs for the distribution of two satellites and terrestrial signals. With the separately power supply DY 70 that powers the LNB, the multiswitch is useable as a stand alone device. The polarisations are available at nine cascade outputs for the installation of further multiswitches. Commercially available DVB-S/S2 set-top-boxes or TVs with an integrated receiver can be used at the 16 subscriber outputs. Inserted terrestrial signals like DVB-T/T2, DAB or FM are available at each subscriber output as well. The stand-by functionality minimizes power consumption by activating the mulitswitch only in case the connected STB is turned on.

Multiswitch 9 inputs, cascade

DY 1708

PROSWITCH multiswitch 17 in 8, cascade & stand alone, TERR. passive

KLASSE A CLASS

characteristics

- Cascadable multiswitch for the distribution of 16 satellite polarisations and terrestrial signals
- Useable as a stand alone device (DY 70 power supply required)
- Stand-by function with connected power supply, optional permanent operation
- Passive terrestrial path to feed in multimedia content or signals from a cable TV operator
- Integrated SAT amplifier for low insertion loss
- Pre-emphasis to compensate the cable loss at high frequencies
- High screening efficiency according to Class A
- Stackable chassis for space-saving installation of various devices
- Colour-coded inputs and outputs
- Compatible with MagentaTV Sat, DIVEO and freenet TV

Technical Data	
SAT-IF trunk	
Inputs SAT	16 pcs.
Outputs SAT	16 pcs.
Frequency range-SAT	950...2150 MHz
Through loss SAT	1...3 dB
Decoupling SAT -SAT	40 dB typ.
Return loss SAT	>10 dB
Terrestrial trunk	
Inputs TERR	1 pcs.
Outputs TERR	1 pcs.
Frequency range TERR	5...862 MHz
Through loss TERR	3,5...4,2 dB
Isolation TERR - SAT	40 dB typ.
Return loss TERR	>10 dB
Subscriber outputs	
Outputs	8 pcs.
Frequency range	5...2150 MHz
TERR type	Passive
Insertion loss SAT	3...-2,2 dB
Insertion TERR	24 dB (±2 dB)
Max. output level subscriber SAT	101 dBµV
Max. output level subscriber TERR	50...110 dBµV (passive)
Return loss subscriber SAT	>10 dB
Return loss subscriber TERR	>10 dB
Control signal	14/18 V, 0/22 kHz, DiSEqC 2.0
Current consumption from receiver	70 mA
Connectors	
F-female	42 pcs.
DC supply voltage	F-female
Color code	VL = black; HL = green; VH = red; HH = yellow

Packaging Data	
Sales unit	1 pcs.
Dimensions (WxHxD) sales unit	405 x 200 x 42 mm
Packaging volume sales unit	3.4 dm³
Gross weight sales unit	0.97 kg
Shipping unit	1 pcs.
Dimensions (WxHxD) shipping unit	405 x 200 x 42 mm
Packaging volume shipping package	3,4

The DY 1708 is a cascadable multiswitch with 17 inputs for the distribution of four satellites and terrestrial signals. With the separately power supply DY 70 that powers the LNB, the multiswitch is useable as a stand alone device. The polarisations are available at 17 cascade outputs for the installation of further multiswitches. Commercially available DVB-S/S2 set-top-boxes or TVs with an integrated receiver can be used at the 8 subscriber outputs. Inserted terrestrial signals like DVB-T/T2, DAB or FM are available at each subscriber output as well. The stand-by functionality minimizes power consumption by activating the mulitswitch only in case the connected STB is turned on.

Multiswitch 17 inputs, cascade

DY 1716

PROSWITCH multiswitch 17 in 16, cascade & stand alone, TERR. passive

KLASSE A CLASS

characteristics

- Cascadable multiswitch for the distribution of 16 satellite polarisations and terrestrial signals
- Useable as a stand alone device (DY 70 power supply required)
- Stand-by function with connected power supply, optional permanent operation
- Passive terrestrial path to feed in multimedia content or signals from a cable TV operator
- Integrated SAT amplifier for low insertion loss
- Pre-emphasis to compensate the cable loss at high frequencies
- High screening efficiency according to Class A
- Stackable chassis for space-saving installation of various devices
- Colour-coded inputs and outputs
- Compatible with MagentaTV Sat, DIVEO and freenet TV

Technical Data	
SAT-IF trunk	
Inputs SAT	16 pcs.
Outputs SAT	16 pcs.
Frequency range-SAT	950...2150 MHz
Through loss SAT	1,5...4,5 dB
Decoupling SAT -SAT	40 dB typ.
Return loss SAT	>10 dB
Terrestrial trunk	
Inputs TERR	1 pcs.
Outputs TERR	1 pcs.
Frequency range TERR	5...862 MHz
Through loss TERR	3,5...4,2 dB
Isolation TERR - SAT	40 dB typ.
Return loss TERR	>10 dB
Subscriber outputs	
Outputs	16 pcs.
Frequency range	5...2150 MHz
TERR type	Passive
Insertion loss SAT	3...-2,2 dB
Insertion TERR	24 dB (±3 dB)
Max. output level subscriber SAT	101 dBµV
Max. output level subscriber TERR	50...110 dBµV (passive)
Return loss subscriber SAT	>10 dB
Return loss subscriber TERR	>10 dB
Control signal	14/18 V, 0/22 kHz, DiSEqC 2.0
Current consumption from receiver	50 mA
Connectors	
F-female	50 pcs.
DC supply voltage	F-female
Color code	VL = black; HL = green; VH = red; HH = yellow

Packaging Data	
Sales unit	1 pcs.
Dimensions (WxHxD) sales unit	402 x 265 x 42 mm
Packaging volume sales unit	4.4 dm^3
Gross weight sales unit	1.29 kg
Shipping unit	1 pcs.
Dimensions (WxHxD) shipping unit	402 x 265 x 42 mm
Packaging volume shipping package	4,4

The DY 1716 is a cascadable multiswitch with 17 inputs for the distribution of four satellites and terrestrial signals. With the separately power supply DY 70 that powers the LNB, the multiswitch is useable as a stand alone device. The polarisations are available at 17 cascade outputs for the installation of further multiswitches. Commercially available DVB-S/S2 set-top-boxes or TVs with an integrated receiver can be used at the 16 subscriber outputs. Inserted terrestrial signals like DVB-T/T2, DAB or FM are available at each subscriber output as well. The stand-by functionality minimizes power consumption by activating the mulitswitch only in case the connected STB is turned on.

Amplifiers PROSWITCH

DY 40

PROSWITCH SAT amplifier

KLASSE A CLASS

Technical Data	
SAT	
Frequency range-SAT	950...2150 MHz
Gain SAT	10...30 dB
Output level	115 dBµV (3.order EN50083-3, 35 dB)
Attenuator SAT	0...20 dB
Slope	0,4,8,12 dB
Isolation trunk	40 dB typ.
Connectors	
F-female	9 pcs.
DC supply voltage	F-female
General data	
Operating voltage DC	12...18 V DC
Current consumption	200 mA
DC bypass	Yes
Screening factor	Class A, EN 50083-2
Dimensions (width x height x depth)	140 x 85 x 38,5 mm
Operating temperature range	-20...+50 °C
Weight	0,290 kg

characteristics

- 4 SAT polarizations in a compact form factor
- Gain from 30 dB
- Indendend attenuation of 0...20 dB per input
- Selectable pre equalization to compensate frequency depending cable loss
- Simple extension up to 16 polarizations
- High screening efficiency according to Class A
- Colour-coded inputs and outputs

The DY 40 is a SAT amplifier for 4 polarization planes, perfectly suited for the construction of large multiswitch systems. The gain is 30 dB in the frequency range from 950. . . 2150 MHz. The gain can be reduced by up to 20 dB in 2 dB increments using buttons. A slope setting to compensate for the frequency-related cable attenuation is possible up to 12 dB. Power can be supplied via the trunk lines, or alternatively with the seperate power supply unit DY 70. Mechanically compatible to all PROSWITCH devices and the overvoltage protection DL 400.

HIPEL ANTENA

Splitter SAT-RF

DM 50

SAT splitter

DM 90

SAT splitter

characteristics

- 2-fold tap for multiswitch cascades
- Distribution of a satellite and terrestrial signals
- 13 dB junctionattenuation

Technical Data	DM 50	DM 90
Frequency range	5...862/950...2400 MHz (TERR/SAT)	5...862/950...2400 MHz (TERR/SAT)
Through loss	1,0...1,8/1,1...2,7 dB (TERR/SAT)	1,5...3,0/2...3,5 dB (TERR/SAT)
TAP loss	13...13,5/12,2...13,7 dB (TERR/SAT)	13...14/14...12 dB (TERR/SAT)
Isolation	35/35 dB (trunk, TERR/SAT)	35/38 dB (trunk, TERR/SAT)
Return loss	10 dB (min., SAT)	10 dB (min., SAT)
Connectors		
F-female	20 pcs.	36 pcs.
General data		
Screening factor	Class A, EN 50083-2	Class A, EN 50083-2
DC Bypass IN/OUT 1A/30V	Yes	Yes

Accessories PROSWITCH

DY 70

Wall wart 230 V AC, 13 V DC

characteristics

- Operating voltage 230 V AC
- Output voltage 13 V DC
- Output current 2.3 A, short-circuit proof

The DY 70 is a short circuit-proofed power supply operating at an input voltage of 230 V AC, 50/60 Hz and provides an output voltage of 13 V DC. It is used in combination with multiswitches of the PRO-SWITCH series, as well as the amplifier DY 40 and surge protector DL 400.

Technical Data	
General data	
F-plug	1 pcs.
Input voltage	100...240 V AC (50/60 Hz)
Operating range	90...264 V AC (50/60 Hz)
Output voltage	13 V DC
Max. output current	2,3 A
Max. output power	<30 W
Average operational efficiency	86,9 %
Low load efficiency (10%)	76,2 %

Technical Data	
Max. humidity, non condensing	90 %
Protection class	II
Protection class system EN 60529 (DIN 40050)	IP 41
Electrical safety standard	EN 60065, EN 60950
EMC	EN 50083-2
Dimensions W x H x D	72,2 x 42,2 x 68,2 mm
Operating temperature range	-20...+40 °C
Storage temperature	-20...+80 °C

Multiswitch systems FLEXSWITCH

WISI Multiswitches:

Reliable technology for flexible use.

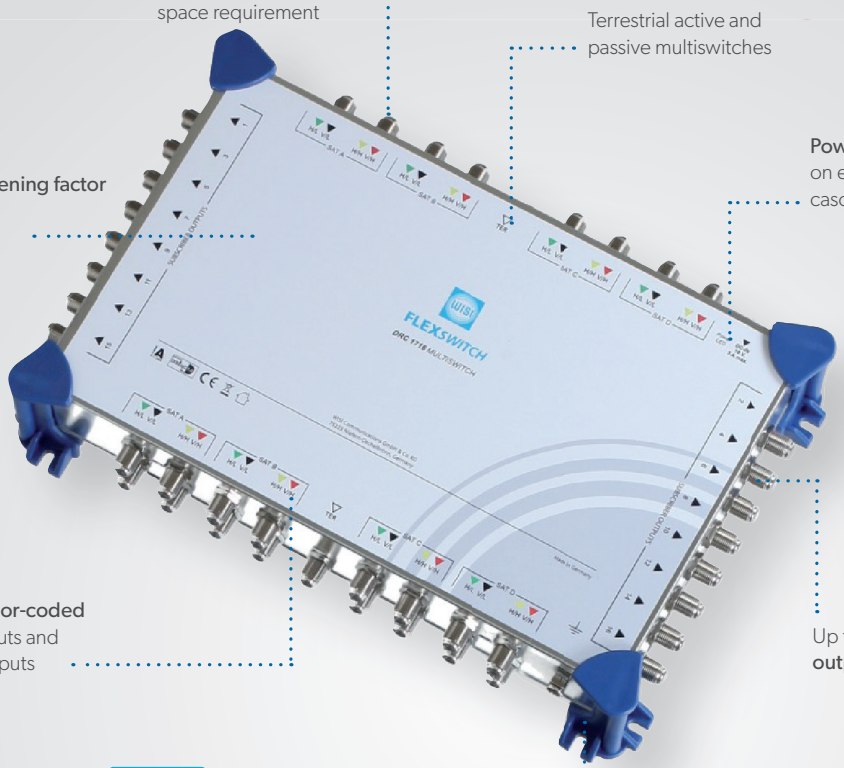

2-row F-sockets minimize the space requirement

Terrestrial active and passive multiswitches

Power supply connection on each multiswitch of the cascade possible

High screening factor Class A

Color-coded inputs and outputs

Up to **32 subscriber outputs** per multiswitch

Mounting bracket for easy mounting

Engineered in Germany

KLASSE A CLASS

Quad LNB compatible

At a glance

- Stand alone multiswitch for the distribution of four SAT polarizations and terrestrial signals
- Quad LNB support for easy expansion of existing equipment
- Active terrestrial branch to distribute DVB-T/T2, DAB and FM without additional amplifier
- Integrated SAT amplifier for low attenuation at the subscriber port
- Pre-correction for compensation of cable slope
- Color coded inputs

Multiswitch 5 inputs, stand alone

DRS 0508

FLEXSWITCH multiswitch 5 in 8, stand alone

KLASSE A CLASS

Technical Data	
SAT-IF trunk	
Inputs SAT	4 pcs.
Frequency range-SAT	950... 2400 MHz
Decoupling SAT -SAT	30 dB typ.
Return loss SAT	>10 dB
Terrestrial trunk	
Inputs TERR	1 pcs.
Frequency range TERR	40... 862 MHz
Isolation TERR - SAT	30 dB typ.
Return loss TERR	>10 dB
Subscriber outputs	
Outputs	8 pcs.
Frequency range	40...2400 MHz
TERR type	active
Insertion loss SAT	0...-5 dB
Insertion TERR	2 dB (±2 dB)
Max. output level subscriber SAT	102 dBµV
Max. output level subscriber TERR	90 dBµV
Return loss subscriber SAT	>10 dB
Return loss subscriber TERR	>10 dB
Control signal	14/18 V, 0/22 kHz
Current consumption from receiver	30 mA
Connectors	
F-female	13 pcs.
Color code	VL = black; HL = green; VH = red; HH = yellow
General data	
Power indicator	LED
Quad LNB support	Yes
LNB supply voltage	14 V/18 V (22 kHz)
Current consumption LNB	max. 500 mA

Packaging Data	
Sales unit	1 pcs.
Dimensions (WxHxD) sales unit	330 x 115 x 65 mm
Packaging volume sales unit	2.2 dm³
Gross weight sales unit	0.56 kg
Shipping unit	1 pcs.
Dimensions (WxHxD) shipping unit	330 x 115 x 60 mm
Packaging volume shipping package	2,2

The DRS 0508 is a stand alone multiswitch with five inputs for the distribution of one satellite and terrestrial signals. The stand alone device is equipped with an integrated power supply which ensures the LNB powering. Additionally integrated is a 22 KHz generator which allows the usage of Quad-LNBs. Commercially available DVB-S/S2 set-top-boxes or TVs with an integrated receiver can be used at the eight subscriber outputs. Inserted terrestrial signals like DVB-T/T2, DAB or FM are available at each subscriber output as well. The very low insertion loss of the DRS 0508 is realised through an active terrestrial and satellite path.

characteristics

- Stand alone multiswitch for the distribution of 4 satellite polarisations and terrestrial signals
- Quad-LNB support
- Active terrestrial path to distribute DVB-T/T2, DAB and FM without an additional amplifier
- Integrated SAT amplifier for low insertion loss
- Pre-emphasis to compensate the cable loss at high frequencies
- High screening efficiency according to Class A
- Compact dimensions paired with installation friendly distance between the F-connectors
- Colour-coded inputs
- Made in Germany
- Compatible with MagentaTV Sat, DIVEO and freenet TV

Multiswitch 5 inputs, stand alone

DRS 0512

FLEXSWITCH multiswitch 5 in 12, stand alone

KLASSE A CLASS

Technical Data	
SAT-IF trunk	
Inputs SAT	4 pcs.
Frequency range-SAT	950... 2400 MHz
Decoupling SAT -SAT	30 dB typ.
Return loss SAT	>10 dB
Terrestrial trunk	
Inputs TERR	1 pcs.
Frequency range TERR	40... 862 MHz
Isolation TERR - SAT	30 dB typ.
Return loss TERR	>10 dB
Subscriber outputs	
Outputs	12 pcs.
Frequency range	40...2400 MHz
TERR type	active
Insertion loss SAT	1...-4 dB
Insertion TERR	2 dB (±2 dB)
Max. output level subscriber SAT	102 dBµV
Max. output level subscriber TERR	84 dBµV
Return loss subscriber SAT	>10 dB
Return loss subscriber TERR	>10 dB
Control signal	14/18 V, 0/22 kHz
Current consumption from receiver	30 mA
Connectors	
F-female	17 pcs.
Color code	VL = black; HL = green; VH = red; HH = yellow
General data	
Power indicator	LED
Quad LNB support	Yes
LNB supply voltage	14 V/18 V (22 kHz)
Current consumption LNB	max. 500 mA

Packaging Data	
Sales unit	1 pcs.
Dimensions (WxHxD) sales unit	330 x 115 x 65 mm
Packaging volume sales unit	4.7 dm³
Gross weight sales unit	0.7 kg
Shipping unit	1 pcs.
Dimensions (WxHxD) shipping unit	390 x 120 x 60 mm
Packaging volume shipping package	4,7

The DRS 0512 is a stand alone multiswitch with five inputs for the distribution of one satellite and terrestrial signals. The stand alone device is equipped with an integrated power supply which ensures the LNB powering. Additionally integrated is a 22 KHz generator which allows the usage of Quad-LNBs. Commercially available DVB-S/S2 set-top-boxes or TVs with an integrated receiver can be used at the 12 subscriber outputs. Inserted terrestrial signals like DVB-T/T2, DAB or FM are available at each subscriber output as well. The very low insertion loss of the DRS 0512 is realised through an active terrestrial and satellite path.

characteristics

- Stand alone multiswitch for the distribution of 4 satellite polarisations and terrestrial signals
- Quad-LNB support
- Active terrestrial path to distribute DVB-T/T2, DAB and FM without an additional amplifier
- Integrated SAT amplifier for low insertion loss
- Pre-emphasis to compensate the cable loss at high frequencies
- High screening efficiency according to Class A
- Compact dimensions paired with installation friendly distance between the F-connectors
- Colour-coded inputs
- Made in Germany
- Compatible with MagentaTV Sat, DIVEO and freenet TV

Multiswitch 5 inputs, stand alone

DRS 0516

FLEXSWITCH multiswitch 5 in 16, stand alone

KLASSE A CLASS

Technical Data	
SAT-IF trunk	
Inputs SAT	4 pcs.
Frequency range-SAT	950... 2400 MHz
Decoupling SAT -SAT	30 dB typ.
Return loss SAT	>10 dB
Terrestrial trunk	
Inputs TERR	1 pcs.
Frequency range TERR	40... 862 MHz
Isolation TERR - SAT	30 dB typ.
Return loss TERR	>10 dB
Subscriber outputs	
Outputs	16 pcs.
Frequency range	40...2400 MHz
TERR type	active
Insertion loss SAT	1...-4 dB
Insertion TERR	2 dB (±2 dB)
Max. output level subscriber SAT	102 dBµV
Max. output level subscriber TERR	84 dBµV
Return loss subscriber SAT	>10 dB
Return loss subscriber TERR	>10 dB
Control signal	14/18 V, 0/22 kHz
Current consumption from receiver	30 mA
Connectors	
F-female	21 pcs.
Color code	VL = black; HL = green; VH = red; HH = yellow
General data	
Power indicator	LED
Quad LNB support	Yes
LNB supply voltage	14 V/18 V (22 kHz)
Current consumption LNB	max. 500 mA

Packaging Data	
Sales unit	1 pcs.
Dimensions (WxHxD) sales unit	390 x 120 x 65 mm
Packaging volume sales unit	4.7 dm³
Gross weight sales unit	0.72 kg
Shipping unit	1 pcs.
Dimensions (WxHxD) shipping unit	390 x 120 x 60 mm
Packaging volume shipping package	4,7

The DRS 0516 is a stand alone multiswitch with five inputs for the distribution of one satellite and terrestrial signals. The stand alone device is equipped with an integrated power supply which ensures the LNB powering. Additionally integrated is a 22 KHz generator which allows the usage of Quad-LNBs. Commercially available DVB-S/S2 set-top-boxes or TVs with an integrated receiver can be used at the 16 subscriber outputs. Inserted terrestrial signals like DVB-T/T2, DAB or FM are available at each subscriber output as well. The very low insertion loss of the DRS 0516 is realised through an active terrestrial and satellite path.

characteristics

- Stand alone multiswitch for the distribution of 4 satellite polarisations and terrestrial signals
- Quad-LNB support
- Active terrestrial path to distribute DVB-T/T2, DAB and FM without an additional amplifier
- Integrated SAT amplifier for low insertion loss
- Pre-emphasis to compensate the cable loss at high frequencies
- High screening efficiency according to Class A
- Compact dimensions paired with installation friendly distance between the F-connectors
- Colour-coded inputs
- Made in Germany
- Compatible with MagentaTV Sat, DIVEO and freenet TV

Multiswitch 5 inputs, stand alone

DRS 0524

FLEXSWITCH multiswitch 5 in 24, stand alone

KLASSE A CLASS

Technical Data	
SAT-IF trunk	
Inputs SAT	4 pcs.
Frequency range-SAT	950... 2400 MHz
Decoupling SAT -SAT	30 dB typ.
Return loss SAT	>10 dB
Terrestrial trunk	
Inputs TERR	1 pcs.
Frequency range TERR	40... 862 MHz
Isolation TERR - SAT	30 dB typ.
Return loss TERR	>10 dB
Subscriber outputs	
Outputs	24 pcs.
Frequency range	40...2400 MHz
TERR type	active
Insertion loss SAT	5...0 dB
Insertion TERR	2 dB (±2 dB)
Max. output level subscriber SAT	102 dBµV
Max. output level subscriber TERR	84 dBµV
Return loss subscriber SAT	>10 dB
Return loss subscriber TERR	>10 dB
Control signal	14/18 V, 0/22 kHz
Current consumption from receiver	30 mA
Connectors	
F-female	29 pcs.
Color code	VL = black; HL = green; VH = red; HH = yellow
General data	
Power indicator	LED
Quad LNB support	Yes
LNB supply voltage	14 V/18 V (22 kHz)
Current consumption LNB	max. 500 mA

Packaging Data	
Sales unit	1 pcs.
Dimensions (WxHxD) sales unit	370 x 235 x 65 mm
Packaging volume sales unit	6 dm³
Gross weight sales unit	1.06 kg
Shipping unit	1 pcs.
Dimensions (WxHxD) shipping unit	370 x 235 x 70 mm
Packaging volume shipping package	6

The DRS 0524 is a stand alone multiswitch with five inputs for the distribution of one satellite and terrestrial signals. The stand alone device is equipped with an integrated power supply which ensures the LNB powering. Additionally integrated is a 22 KHz generator which allows the usage of Quad-LNBs. Commercially available DVB-S/S2 set-top-boxes or TVs with an integrated receiver can be used at the 24 subscriber outputs. Inserted terrestrial signals like DVB-T/T2, DAB or FM are available at each subscriber output as well. The very low insertion loss of the DRS 0524 is realised through an active terrestrial and satellite path.

characteristics

- Stand alone multiswitch for the distribution of 4 satellite polarisations and terrestrial signals
- Quad-LNB support
- Active terrestrial path to distribute DVB-T/T2, DAB and FM without an additional amplifier
- Integrated SAT amplifier for low insertion loss
- Pre-emphasis to compensate the cable loss at high frequencies
- High screening efficiency according to Class A
- Compact dimensions paired with installation friendly distance between the F-connectors
- Colour-coded inputs
- Made in Germany
- Compatible with MagentaTV Sat, DIVEO and freenet TV

Multiswitch 5 inputs, stand alone

DRS 0532

FLEXSWITCH multiswitch 5 in 32, stand alone

KLASSE A CLASS

Technical Data	
SAT-IF trunk	
Inputs SAT	4 pcs.
Frequency range-SAT	950... 2400 MHz
Decoupling SAT -SAT	30 dB typ.
Return loss SAT	>10 dB
Terrestrial trunk	
Inputs TERR	1 pcs.
Frequency range TERR	40... 862 MHz
Isolation TERR - SAT	30 dB typ.
Return loss TERR	>10 dB
Subscriber outputs	
Outputs	32 pcs.
Frequency range	40...2400 MHz
TERR type	active
Insertion loss SAT	5...0 dB
Insertion TERR	2 dB (±2 dB)
Max. output level subscriber SAT	102 dBµV
Max. output level subscriber TERR	84 dBµV
Return loss subscriber SAT	>10 dB
Return loss subscriber TERR	>10 dB
Control signal	14/18 V, 0/22 kHz
Current consumption from receiver	30 mA
Connectors	
F-female	37 pcs.
Color code	VL = black; HL = green; VH = red; HH = yellow
General data	
Power indicator	LED
Quad LNB support	Yes
LNB supply voltage	14 V/18 V (22 kHz)
Current consumption LNB	max. 500 mA

Packaging Data	
Sales unit	1 pcs.
Dimensions (WxHxD) sales unit	390 x 120 x 65 mm
Packaging volume sales unit	6 dm³
Gross weight sales unit	1.1 kg
Shipping unit	1 pcs.
Dimensions (WxHxD) shipping unit	370 x 235 x 70 mm
Packaging volume shipping package	6

The DRS 0532 is a stand alone multiswitch with five inputs for the distribution of one satellite and terrestrial signals. The stand alone device is equipped with an integrated power supply which ensures the LNB powering. Additionally integrated is a 22 KHz generator which allows the usage of Quad-LNBs. Commercially available DVB-S/S2 set-top-boxes or TVs with an integrated receiver can be used at the 32 subscriber outputs. Inserted terrestrial signals like DVB-T/T2, DAB or FM are available at each subscriber output as well. The very low insertion loss of the DRS 0532 is realised through an active terrestrial and satellite path.

characteristics

- Stand alone multiswitch for the distribution of 4 satellite polarisations and terrestrial signals
- Quad-LNB support
- Active terrestrial path to distribute DVB-T/T2, DAB and FM without an additional amplifier
- Integrated SAT amplifier for low insertion loss
- Pre-emphasis to compensate the cable loss at high frequencies
- High screening efficiency according to Class A
- Compact dimensions paired with installation friendly distance between the F-connectors
- Colour-coded inputs
- Made in Germany
- Compatible with MagentaTV Sat, DIVEO and freenet TV

Multiswitch 5 inputs, receiver powered

DRR 0508

FLEXSWITCH multiswitch, receiver power, 5 in 8

KLASSE A CLASS

Technical Data	
SAT-IF trunk	
Inputs SAT	4 pcs.
Frequency range-SAT	950... 2400 MHz
Decoupling SAT -SAT	30 dB typ.
Return loss SAT	>10 dB
Terrestrial trunk	
Inputs TERR	1 pcs.
Frequency range TERR	5... 862 MHz
Isolation TERR - SAT	30 dB typ.
Return loss TERR	>10 dB
Subscriber outputs	
Outputs	8 pcs.
Frequency range	5...2400 MHz
TERR type	Passive
Insertion loss SAT	0...-5 dB
Insertion TERR	18 dB (±2 dB)
Max. output level subscriber SAT	102 dBµV
Max. output level subscriber TERR	50...110 dBµV (passive)
Return loss subscriber SAT	>10 dB
Return loss subscriber TERR	>10 dB
Control signal	14/18 V, 0/22 kHz
Current consumption from receiver	30 mA
Connectors	
F-female	13 pcs.
DC supply voltage	Connector type DC 5.5/2.1 mm
Color code	VL = black; HL = green; VH = red; HH = yellow
General data	
Power indicator	LED
Operating voltage	receiver powered
Power consumption max.	<0,5 W

Packaging Data	
Sales unit	1 pcs.
Dimensions (WxHxD) sales unit	115 x 115 x 40 mm
Packaging volume sales unit	0.53 dm³
Gross weight sales unit	0.28 kg
Shipping unit	1 pcs.
Dimensions (WxHxD) shipping unit	115 x 115 x 40 mm
Packaging volume shipping package	0,53

The DRR 0508 is a receiver powered multiswitch with five inputs for the distribution of one satellite and terrestrial signals. Commercially available DVB-S/S2 set-top-boxes or TVs with an integrated receiver can be used at the eight subscriber outputs. Inserted terrestrial signals like DVB-T/T2, DAB or FM are available at each subscriber output as well. The very low insertion loss of the DRR 0508 is realised through an active satellite path. Through the passive terrestrial path, it is possible to feed in multimedia services like "LAN over Coax" or signals from a headend system. The LNB is powered by the switching voltage of the connected receivers and an additional power supply is not required, which reduces the operating costs.

characteristics

- Receiver powered multiswitch for the distribution of 4 satellite polarisations and terrestrial signals
- Power supply-free usage
- Passive terrestrial path
- Integrated SAT amplifier for low insertion loss
- Pre-emphasis to compensate the cable loss at high frequencies
- Terrestrial signals available at the receiver without any power supply of the multiswitch
- High screening efficiency according to Class A
- Compact dimensions paired with installation friendly distance between the F-connectors
- Made in Germany
- Compatible with MagentaTV Sat, DIVEO and freenet TV

Multiswitch 5 inputs, receiver powered

DRR 0516

FLEXSWITCH multiswitch, receiver power, 5 in 16

KLASSE A CLASS

Technical Data	
SAT-IF trunk	
Inputs SAT	4 pcs.
Frequency range-SAT	950... 2400 MHz
Decoupling SAT -SAT	30 dB typ.
Return loss SAT	>10 dB
Terrestrial trunk	
Inputs TERR	1 pcs.
Frequency range TERR	5... 862 MHz
Isolation TERR - SAT	30 dB typ.
Return loss TERR	>10 dB
Subscriber outputs	
Outputs	16 pcs.
Frequency range	5...2400 MHz
TERR type	Passive
Insertion loss SAT	1...-4 dB
Insertion TERR	24 dB (±3 dB)
Max. output level subscriber SAT	102 dBµV
Max. output level subscriber TERR	50...110 dBµV (passive)
Return loss subscriber SAT	>10 dB
Return loss subscriber TERR	>10 dB
Control signal	14/18 V, 0/22 kHz
Current consumption from receiver	30 mA
Connectors	
F-female	21 pcs.
DC supply voltage	Connector type DC 5.5/2.1 mm
Color code	VL = black; HL = green; VH = red; HH = yellow
General data	
Power indicator	LED
Operating voltage	receiver powered
Power consumption max.	<0,5 W

Packaging Data	
Sales unit	1 pcs.
Dimensions (WxHxD) sales unit	270 x 170 x 65 mm
Packaging volume sales unit	3.2 dm³
Gross weight sales unit	0.56 kg
Shipping unit	1 pcs.
Dimensions (WxHxD) shipping unit	270 x 170 x 70 mm
Packaging volume shipping package	3,2

The DRR 0516 is a receiver powered multiswitch with five inputs for the distribution of one satellite and terrestrial signals. Commercially available DVB-S/S2 set-top-boxes or TVs with an integrated receiver can be used at the 16 subscriber outputs. Inserted terrestrial signals like DVB-T/T2, DAB or FM are available at each subscriber output as well. The very low insertion loss of the DRR 0516 is realised through an active satellite path. Through the passive terrestrial path, it is possible to feed in multimedia services like "LAN over Coax" or signals from a headend system. The LNB is powered by the switching voltage of the connected receivers and an additional power supply is not required, which reduces the operating costs.

characteristics

- Receiver powered multiswitch for the distribution of 4 satellite polarisations and terrestrial signals
- Power supply-free usage
- Passive terrestrial path
- Integrated SAT amplifier for low insertion loss
- Pre-emphasis to compensate the cable loss at high frequencies
- Terrestrial signals available at the receiver without any power supply of the multiswitch
- High screening efficiency according to Class A
- Compact dimensions paired with installation friendly distance between the F-connectors
- Made in Germany
- Compatible with MagentaTV Sat, DIVEO and freenet TV

Multiswitch 5 inputs, cascade

DRC 0508

FLEXSWITCH multiswitch 5 in 8, cascade, TERR. active

KLASSE A CLASS

Technical Data	
SAT-IF trunk	
Inputs SAT	4 pcs.
Outputs SAT	4 pcs.
Frequency range-SAT	950... 2400 MHz
Through loss SAT	1...2 dB
Decoupling SAT -SAT	30 dB typ.
Return loss SAT	>10 dB
Terrestrial trunk	
Inputs TERR	1 pcs.
Outputs TERR	1 pcs.
Frequency range TERR	40... 862 MHz
Through loss TERR	2 dB (±1 dB)
Isolation TERR - SAT	30 dB typ.
Return loss TERR	>10 dB
Subscriber outputs	
Outputs	8 pcs.
Frequency range	40...2400 MHz
TERR type	active
Insertion loss SAT	3...0 dB
Insertion TERR	0 dB (±3 dB)
Max. output level subscriber SAT	102 dBµV
Max. output level subscriber TERR	84 dBµV
Return loss subscriber SAT	>10 dB
Return loss subscriber TERR	>10 dB
Control signal	14/18 V, 0/22 kHz
Current consumption from receiver	35 mA
Connectors	
F-female	18 pcs.
DC supply voltage	Connector type DC 5.5/2.1 mm
Color code	VL = black; HL = green; VH = red; HH = yellow

Packaging Data	
Sales unit	1 pcs.
Dimensions (WxHxD) sales unit	270 x 170 x 65 mm
Packaging volume sales unit	3.2 dm³
Gross weight sales unit	0.54 kg
Shipping unit	1 pcs.
Dimensions (WxHxD) shipping unit	270 x 170 x 70 mm
Packaging volume shipping package	3,2

The DRC 0508 is a cascadable multiswitch with five inputs for the distribution of one satellite and terrestrial signals. The polarisations are available at five cascade outputs for the installation of further multiswitches. Commercially available DVB-S/S2 set-top-boxes or TVs with an integrated receiver can be used at the eight subscriber outputs. Inserted terrestrial signals like DVB-T/T2, DAB or FM are available at each subscriber output as well. The very low insertion loss of the DRC 0508 is realised through an active terrestrial and satellite path. The LNB can be powered by previously installed amplifiers, or the available power supply DRP 1533.

characteristics

- Cascadable multiswitch for the distribution of 4 satellite polarisations and terrestrial signals
- Active terrestrial path to distribute DVB-T/T2, DAB and FM without an additional amplifier
- Integrated SAT amplifier for low insertion loss
- Pre-emphasis to compensate the cable loss at high frequencies
- High screening efficiency according to Class A
- Compact dimensions paired with installation friendly distance between the F-connectors
- Colour-coded inputs and outputs
- Made in Germany
- Compatible with MagentaTV Sat, DIVEO and freenet TV

Multiswitch 5 inputs, cascade

DRC 0512

FLEXSWITCH multiswitch 5 in 12, cascade, TERR. active

KLASSE A CLASS

Technical Data	
SAT-IF trunk	
Inputs SAT	4 pcs.
Outputs SAT	4 pcs.
Frequency range-SAT	950... 2400 MHz
Through loss SAT	2...4 dB
Decoupling SAT -SAT	30 dB typ.
Return loss SAT	>10 dB
Terrestrial trunk	
Inputs TERR	1 pcs.
Outputs TERR	1 pcs.
Frequency range TERR	40... 862 MHz
Through loss TERR	3 dB (±2 dB)
Isolation TERR - SAT	30 dB typ.
Return loss TERR	>10 dB
Subscriber outputs	
Outputs	12 pcs.
Frequency range	40...2400 MHz
TERR type	active
Insertion loss SAT	4...1 dB
Insertion TERR	0 dB (±3 dB)
Max. output level subscriber SAT	102 dBµV
Max. output level subscriber TERR	84 dBµV
Return loss subscriber SAT	>10 dB
Return loss subscriber TERR	>10 dB
Control signal	14/18 V, 0/22 kHz
Current consumption from receiver	35 mA
Connectors	
F-female	22 pcs.
DC supply voltage	Connector type DC 5.5/2.1 mm
Color code	VL = black; HL = green; VH = red; HH = yellow

Packaging Data	
Sales unit	1 pcs.
Dimensions (WxHxD) sales unit	270 x 170 x 70 mm
Packaging volume sales unit	3.2 dm³
Gross weight sales unit	0.7 kg
Shipping unit	1 pcs.
Dimensions (WxHxD) shipping unit	270 x 170 x 70 mm
Packaging volume shipping package	3,2

The DRC 0512 is a cascadable multiswitch with five inputs for the distribution of one satellite and terrestrial signals. The polarisations are available at five cascade outputs for the installation of further multiswitches. Commercially available DVB-S/S2 set-top-boxes or TVs with an integrated receiver can be used at the 12 subscriber outputs. Inserted terrestrial signals like DVB-T/T2, DAB or FM are available at each subscriber output as well. The very low insertion loss of the DRC 0512 is realised through an active terrestrial and satellite path. The LNB can be powered by previously installed amplifiers, or the available power supply DRP 1533.

characteristics

- Cascadable multiswitch for the distribution of 4 satellite polarisations and terrestrial signals
- Active terrestrial path to distribute DVB-T/T2, DAB and FM without an additional amplifier
- Integrated SAT amplifier for low insertion loss
- Pre-emphasis to compensate the cable loss at high frequencies
- High screening efficiency according to Class A
- Compact dimensions paired with installation friendly distance between the F-connectors
- Colour-coded inputs and outputs
- Made in Germany
- Compatible with MagentaTV Sat, DIVEO and freenet TV

Multiswitch 5 inputs, cascade

DRC 0516

FLEXSWITCH multiswitch 5 in 16, cascade, TERR. active

KLASSE A CLASS

Technical Data	
SAT-IF trunk	
Inputs SAT	4 pcs.
Outputs SAT	4 pcs.
Frequency range-SAT	950... 2400 MHz
Through loss SAT	2...4 dB
Decoupling SAT -SAT	30 dB typ.
Return loss SAT	>10 dB
Terrestrial trunk	
Inputs TERR	1 pcs.
Outputs TERR	1 pcs.
Frequency range TERR	40... 862 MHz
Through loss TERR	3 dB (±2 dB)
Isolation TERR - SAT	30 dB typ.
Return loss TERR	>10 dB
Subscriber outputs	
Outputs	16 pcs.
Frequency range	40...2400 MHz
TERR type	active
Insertion loss SAT	4...1 dB
Insertion TERR	0 dB (±3 dB)
Max. output level subscriber SAT	102 dBµV
Max. output level subscriber TERR	84 dBµV
Return loss subscriber SAT	>10 dB
Return loss subscriber TERR	>10 dB
Control signal	14/18 V, 0/22 kHz
Current consumption from receiver	35 mA
Connectors	
F-female	26 pcs.
DC supply voltage	Connector type DC 5.5/2.1 mm
Color code	VL = black; HL = green; VH = red; HH = yellow

Packaging Data	
Sales unit	1 pcs.
Dimensions (WxHxD) sales unit	270 x 170 x 65 mm
Packaging volume sales unit	3.2 dm³
Gross weight sales unit	0.7 kg
Shipping unit	1 pcs.
Dimensions (WxHxD) shipping unit	270 x 170 x 70 mm
Packaging volume shipping package	3,2

The DRC 0516 is a cascadable multiswitch with five inputs for the distribution of one satellite and terrestrial signals. The polarisations are available at five cascade outputs for the installation of further multiswitches. Commercially available DVB-S/S2 set-top-boxes or TVs with an integrated receiver can be used at the 16 subscriber outputs. Inserted terrestrial signals like DVB-T/T2, DAB or FM are available at each subscriber output as well. The very low insertion loss of the DRC 0516 is realised through an active terrestrial and satellite path. The LNB can be powered by previously installed amplifiers, or the available power supply DRP 1533.

characteristics

- Cascadable multiswitch for the distribution of 4 satellite polarisations and terrestrial signals
- Active terrestrial path to distribute DVB-T/T2, DAB and FM without an additional amplifier
- Integrated SAT amplifier for low insertion loss
- Pre-emphasis to compensate the cable loss at high frequencies
- High screening efficiency according to Class A
- Compact dimensions paired with installation friendly distance between the F-connectors
- Colour-coded inputs and outputs
- Made in Germany
- Compatible with MagentaTV Sat, DIVEO and freenet TV

Multiswitch 5 inputs, cascade

DRC 0524

FLEXSWITCH multiswitch 5 in 24, cascade, TERR. active

KLASSE A CLASS

Technical Data	
SAT-IF trunk	
Inputs SAT	4 pcs.
Outputs SAT	4 pcs.
Frequency range-SAT	950... 2400 MHz
Through loss SAT	2...6 dB
Decoupling SAT -SAT	30 dB typ.
Return loss SAT	>10 dB
Terrestrial trunk	
Inputs TERR	1 pcs.
Outputs TERR	1 pcs.
Frequency range TERR	40... 862 MHz
Through loss TERR	2 dB (±2 dB)
Isolation TERR - SAT	30 dB typ.
Return loss TERR	>10 dB
Subscriber outputs	
Outputs	24 pcs.
Frequency range	40…2400 MHz
TERR type	active
Insertion loss SAT	6...0 dB
Insertion TERR	2 dB (±2 dB)
Max. output level subscriber SAT	102 dBµV
Max. output level subscriber TERR	91 dBµV
Return loss subscriber SAT	>10 dB
Return loss subscriber TERR	>10 dB
Control signal	14/18 V, 0/22 kHz
Current consumption from receiver	35 mA
Connectors	
F-female	34 pcs.
DC supply voltage	Connector type DC 5.5/2.1 mm
Color code	VL = black; HL = green; VH = red; HH = yellow

Packaging Data	
Sales unit	1 pcs.
Dimensions (WxHxD) sales unit	270 x 170 x 65 mm
Packaging volume sales unit	3.2 dm³
Gross weight sales unit	0.8 kg
Shipping unit	1 pcs.
Dimensions (WxHxD) shipping unit	270 x 170 x 70 mm
Packaging volume shipping package	3,2

The DRC 0524 is a cascadable multiswitch with five inputs for the distribution of one satellite and terrestrial signals. The polarisations are available at five cascade outputs for the installation of further multiswitches. Commercially available DVB-S/S2 set-top-boxes or TVs with an integrated receiver can be used at the 24 subscriber outputs. Inserted terrestrial signals like DVB-T/T2, DAB or FM are available at each subscriber output as well. The very low insertion loss of the DRC 0524 is realised through an active terrestrial and satellite path. The LNB can be powered by previously installed amplifiers, or the available power supply DRP 1533.

characteristics

- Cascadable multiswitch for the distribution of 4 satellite polarisations and terrestrial signals
- Active terrestrial path to distribute DVB-T/T2, DAB and FM without an additional amplifier
- Integrated SAT amplifier for low insertion loss
- Pre-emphasis to compensate the cable loss at high frequencies
- High screening efficiency according to Class A
- Compact dimensions paired with installation friendly distance between the F-connectors
- Colour-coded inputs and outputs
- Made in Germany
- Compatible with MagentaTV Sat, DIVEO and freenet TV

Multiswitch 5 inputs, cascade

DRC 0532

FLEXSWITCH multiswitch 5 in 32, cascade, TERR. active

KLASSE A CLASS

Technical Data	
SAT-IF trunk	
Inputs SAT	4 pcs.
Outputs SAT	4 pcs.
Frequency range-SAT	950... 2400 MHz
Through loss SAT	2...6 dB
Decoupling SAT -SAT	30 dB typ.
Return loss SAT	>10 dB
Terrestrial trunk	
Inputs TERR	1 pcs.
Outputs TERR	1 pcs.
Frequency range TERR	40... 862 MHz
Through loss TERR	2 dB (±2 dB)
Isolation TERR - SAT	30 dB typ.
Return loss TERR	>10 dB
Subscriber outputs	
Outputs	32 pcs.
Frequency range	40…2400 MHz
TERR type	active
Insertion loss SAT	6...0 dB
Insertion TERR	2 dB (±2 dB)
Max. output level subscriber SAT	102 dBµV
Max. output level subscriber TERR	91 dBµV
Return loss subscriber SAT	>10 dB
Return loss subscriber TERR	>10 dB
Control signal	14/18 V, 0/22 kHz
Current consumption from receiver	35 mA
Connectors	
F-female	42 pcs.
DC supply voltage	Connector type DC 5.5/2.1 mm
Color code	VL = black; HL = green; VH = red; HH = yellow

Packaging Data	
Sales unit	1 pcs.
Dimensions (WxHxD) sales unit	270 x 170 x 50 mm
Packaging volume sales unit	3.2 dm³
Gross weight sales unit	0.84 kg
Shipping unit	1 pcs.
Dimensions (WxHxD) shipping unit	270 x 170 x 70 mm
Packaging volume shipping package	3,2

The DRC 0532 is a cascadable multiswitch with five inputs for the distribution of one satellite and terrestrial signals. The polarisations are available at five cascade outputs for the installation of further multiswitches. Commercially available DVB-S/S2 set-top-boxes or TVs with an integrated receiver can be used at the 32 subscriber outputs. Inserted terrestrial signals like DVB-T/T2, DAB or FM are available at each subscriber output as well. The very low insertion loss of the DRC 0532 is realised through an active terrestrial and satellite path. The LNB can be powered by previously installed amplifiers, or the available power supply DRP 1533.

characteristics

- Cascadable multiswitch for the distribution of 4 satellite polarisations and terrestrial signals
- Active terrestrial path to distribute DVB-T/T2, DAB and FM without an additional amplifier
- Integrated SAT amplifier for low insertion loss
- Pre-emphasis to compensate the cable loss at high frequencies
- High screening efficiency according to Class A
- Compact dimensions paired with installation friendly distance between the F-connectors
- Colour-coded inputs and outputs
- Made in Germany
- Compatible with MagentaTV Sat, DIVEO and freenet TV

Multiswitch 9 inputs, cascade

DRC 0908

FLEXSWITCH multiswitch 9 in 8, cascade, TERR. passive

KLASSE A CLASS

Technical Data	
SAT-IF trunk	
Inputs SAT	8 pcs.
Outputs SAT	8 pcs.
Frequency range-SAT	950...2400 MHz
Through loss SAT	1 dB (±1 dB)
Decoupling SAT -SAT	30 dB typ.
Return loss SAT	>10 dB
Terrestrial trunk	
Inputs TERR	1 pcs.
Outputs TERR	1 pcs.
Frequency range TERR	5...862 MHz
Through loss TERR	2 dB (±2 dB)
Isolation TERR - SAT	30 dB typ.
Return loss TERR	>10 dB
Subscriber outputs	
Outputs	8 pcs.
Frequency range	5...2400 MHz
TERR type	Passive
Insertion loss SAT	0...-2 dB
Insertion TERR	24 dB (±2 dB)
Max. output level subscriber SAT	102 dBµV
Max. output level subscriber TERR	50...110 dBµV (passive)
Return loss subscriber SAT	>10 dB
Return loss subscriber TERR	>10 dB
Control signal	14/18 V, 0/22 kHz, DiSEqC 1.0
Current consumption from receiver	45 mA
Connectors	
F-female	17 pcs.
DC supply voltage	Connector type DC 5.5/2.1 mm
Color code	VL = black; HL = green; VH = red; HH = yellow

Packaging Data	
Sales unit	1 pcs.
Dimensions (WxHxD) sales unit	270 x 170 x 70 mm
Packaging volume sales unit	3.2 dm³
Gross weight sales unit	0.68 kg
Shipping unit	1 pcs.
Dimensions (WxHxD) shipping unit	270 x 170 x 70 mm
Packaging volume shipping package	3,2

The DRC 0908 is a cascadable multiswitch with nine inputs for the distribution of two satellites and terrestrial signals. The polarisations are available at nine cascade outputs for the installation of further multiswitches. Commercially available DVB-S/S2 set-top-boxes or TVs with an integrated receiver can be used at the eight subscriber outputs. Inserted terrestrial signals like DVB-T/T2, DAB or FM are available at each subscriber output as well. The very low insertion loss of the DRC 0908 is realised through an active satellite path. Through the passive terrestrial path it is possible to feed in multimedia services like "LAN over Coax", or signals from a central headend system. The LNBs can be powered by previously installed amplifiers, or the available power supply DRP 1533.

characteristics

- Cascadable multiswitch for the distribution of 8 satellite polarisations and terrestrial signals
- Passive terrestrial path
- Integrated SAT amplifier for low insertion loss
- Pre-emphasis to compensate the cable loss at high frequencies
- Terrestrial signals available at the receiver without any power supply of the multiswitch
- High screening efficiency according to Class A
- Compact dimensions paired with installation friendly distance between the F-connectors
- Colour-coded inputs and outputs
- Made in Germany
- Compatible with MagentaTV Sat, DIVEO and freenet TV

Multiswitch 9 inputs, cascade

DRC 0912

FLEXSWITCH multiswitch 9 in 12, cascade, TERR. passive

KLASSE A CLASS

Technical Data	
SAT-IF trunk	
Inputs SAT	8 pcs.
Outputs SAT	8 pcs.
Frequency range-SAT	950...2400 MHz
Through loss SAT	1...3 dB (±2 dB)
Decoupling SAT -SAT	30 dB typ.
Return loss SAT	>10 dB
Terrestrial trunk	
Inputs TERR	1 pcs.
Outputs TERR	1 pcs.
Frequency range TERR	5...862 MHz
Through loss TERR	4 dB (±2 dB)
Isolation TERR - SAT	30 dB typ.
Return loss TERR	>10 dB
Subscriber outputs	
Outputs	12 pcs.
Frequency range	5...2400 MHz
TERR type	Passive
Insertion loss SAT	2...0 dB
Insertion TERR	28 dB (±3 dB)
Max. output level subscriber SAT	102 dBµV
Max. output level subscriber TERR	50...110 dBµV (passive)
Return loss subscriber SAT	>10 dB
Return loss subscriber TERR	>10 dB
Control signal	14/18 V, 0/22 kHz, DiSEqC 1.0
Current consumption from receiver	45 mA
Connectors	
F-female	21 pcs.
DC supply voltage	Connector type DC 5.5/2.1 mm
Color code	VL = black; HL = green; VH = red; HH = yellow

Packaging Data	
Sales unit	1 pcs.
Dimensions (WxHxD) sales unit	370 x 240 x 65 mm
Packaging volume sales unit	6 dm³
Gross weight sales unit	0.92 kg
Shipping unit	1 pcs.
Dimensions (WxHxD) shipping unit	370 x 235 x 70 mm
Packaging volume shipping package	6

The DRC 0912 is a cascadable multiswitch with nine inputs for the distribution of two satellites and terrestrial signals. The polarisations are available at nine cascade outputs for the installation of further multiswitches. Commercially available DVB-S/S2 set-top-boxes or TVs with an integrated receiver can be used at the 12 subscriber outputs. Inserted terrestrial signals like DVB-T/T2, DAB or FM are available at each subscriber output as well. The very low insertion loss of the DRC 0912 is realised through an active satellite path. Through the passive terrestrial path it is possible to feed in multimedia services like "LAN over Coax", or signals from a central headend system. The LNBs can be powered by previously installed amplifiers, or the available power supply DRP 1533.

characteristics

- Cascadable multiswitch for the distribution of 8 satellite polarisations and terrestrial signals
- Passive terrestrial path
- Integrated SAT amplifier for low insertion loss
- Pre-emphasis to compensate the cable loss at high frequencies
- Terrestrial signals available at the receiver without any power supply of the multiswitch
- High screening efficiency according to Class A
- Compact dimensions paired with installation friendly distance between the F-connectors
- Colour-coded inputs and outputs
- Made in Germany
- Compatible with MagentaTV Sat, DIVEO and freenet TV

Multiswitch 9 inputs, cascade

DRC 0916

FLEXSWITCH multiswitch 9 in 16, cascade, TERR. passive

KLASSE A CLASS

Technical Data	
SAT-IF trunk	
Inputs SAT	8 pcs.
Outputs SAT	8 pcs.
Frequency range-SAT	950...2400 MHz
Through loss SAT	4 dB (±2 dB)
Decoupling SAT -SAT	30 dB typ.
Return loss SAT	>10 dB
Terrestrial trunk	
Inputs TERR	1 pcs.
Outputs TERR	1 pcs.
Frequency range TERR	5...862 MHz
Through loss TERR	-2 dB (±2 dB)
Isolation TERR - SAT	30 dB typ.
Return loss TERR	>10 dB
Subscriber outputs	
Outputs	16 pcs.
Frequency range	5...2400 MHz
TERR type	Passive
Insertion loss SAT	2...0 dB
Insertion TERR	28 dB (±3 dB)
Max. output level subscriber SAT	102 dBµV
Max. output level subscriber TERR	50...110 dBµV (passive)
Return loss subscriber SAT	>10 dB
Return loss subscriber TERR	>10 dB
Control signal	14/18 V, 0/22 kHz, DiSEqC 1.0
Current consumption from receiver	45 mA
Connectors	
F-female	25 pcs.
DC supply voltage	Connector type DC 5.5/2.1 mm
Color code	VL = black; HL = green; VH = red; HH = yellow

Packaging Data	
Sales unit	1 pcs.
Dimensions (WxHxD) sales unit	370 x 240 x 65 mm
Packaging volume sales unit	6 dm³
Gross weight sales unit	0.94 kg
Shipping unit	1 pcs.
Dimensions (WxHxD) shipping unit	370 x 235 x 70 mm
Packaging volume shipping package	6

The DRC 0916 is a cascadable multiswitch with nine inputs for the distribution of two satellites and terrestrial signals. The polarisations are available at nine cascade outputs for the installation of further multiswitches. Commercially available DVB-S/S2 set-top-boxes or TVs with an integrated receiver can be used at the 16 subscriber outputs. Inserted terrestrial signals like DVB-T/T2, DAB or FM are available at each subscriber output as well. The very low insertion loss of the DRC 0916 is realised through an active satellite path. Through the passive terrestrial path it is possible to feed in multimedia services like "LAN over Coax", or signals from a central headend system. The LNBs can be powered by previously installed amplifiers, or the available power supply DRP 1533.

characteristics

- Cascadable multiswitch for the distribution of 8 satellite polarisations and terrestrial signals
- Passive terrestrial path
- Integrated SAT amplifier for low insertion loss
- Pre-emphasis to compensate the cable loss at high frequencies
- Terrestrial signals available at the receiver without any power supply of the multiswitch
- High screening efficiency according to Class A
- Compact dimensions paired with installation friendly distance between the F-connectors
- Colour-coded inputs and outputs
- Made in Germany
- Compatible with MagentaTV Sat, DIVEO and freenet TV

Multiswitch 9 inputs, cascade

DRC 0924

FLEXSWITCH multiswitch 9 in 24, cascade, TERR. passive

KLASSE A CLASS

Technical Data	
SAT-IF trunk	
Inputs SAT	8 pcs.
Outputs SAT	8 pcs.
Frequency range-SAT	950... 2400 MHz
Through loss SAT	2...4 dB
Decoupling SAT -SAT	30 dB typ.
Return loss SAT	>10 dB
Terrestrial trunk	
Inputs TERR	1 pcs.
Outputs TERR	1 pcs.
Frequency range TERR	5... 862 MHz
Through loss TERR	4...6 dB
Isolation TERR - SAT	30 dB typ.
Return loss TERR	>10 dB
Subscriber outputs	
Outputs	24 pcs.
Frequency range	5...2400 MHz
TERR type	Passive
Insertion loss SAT	2...0 dB
Insertion TERR	33 dB (±3 dB)
Max. output level subscriber SAT	102 dBµV
Max. output level subscriber TERR	50...110 dBµV (passive)
Return loss subscriber SAT	>10 dB
Return loss subscriber TERR	>10 dB
Control signal	14/18 V, 0/22 kHz, DiSEqC 1.0
Current consumption from receiver	45 mA
Connectors	
F-female	33 pcs.
DC supply voltage	Connector type DC 5.5/2.1 mm
Color code	VL = black; HL = green; VH = red; HH = yellow

Packaging Data	
Sales unit	1 pcs.
Dimensions (WxHxD) sales unit	350 x 330 x 65 mm
Packaging volume sales unit	8 dm³
Gross weight sales unit	1.28 kg
Shipping unit	1 pcs.
Dimensions (WxHxD) shipping unit	350 x 330 x 70 mm
Packaging volume shipping package	8

The DRC 0924 is a cascadable multiswitch with nine inputs for the distribution of two satellites and terrestrial signals. The polarisations are available at nine cascade outputs for the installation of further multiswitches. Commercially available DVB-S/S2 set-top-boxes or TVs with an integrated receiver can be used at the 24 subscriber outputs. Inserted terrestrial signals like DVB-T/T2, DAB or FM are available at each subscriber output as well. The very low insertion loss of the DRC 0924 is realised through an active satellite path. Through the passive terrestrial path it is possible to feed in multimedia services like "LAN over Coax", or signals from a central headend system. The LNBs can be powered by previously installed amplifiers, or the available power supply DRP 1533.

characteristics

- Cascadable multiswitch for the distribution of 8 satellite polarisations and terrestrial signals
- Passive terrestrial path
- Integrated SAT amplifier for low insertion loss
- Pre-emphasis to compensate the cable loss at high frequencies
- Terrestrial signals available at the receiver without any power supply of the multiswitch
- High screening efficiency according to Class A
- Compact dimensions paired with installation friendly distance between the F-connectors
- Colour-coded inputs and outputs
- Made in Germany
- Compatible with MagentaTV Sat, DIVEO and freenet TV

Multiswitch 9 inputs, cascade

DRC 0932

FLEXSWITCH multiswitch 9 in 32, cascade, TERR. passive

KLASSE A CLASS

Technical Data	
SAT-IF trunk	
Inputs SAT	8 pcs.
Outputs SAT	8 pcs.
Frequency range-SAT	950... 2400 MHz
Through loss SAT	2...4 dB
Decoupling SAT -SAT	30 dB typ.
Return loss SAT	>10 dB
Terrestrial trunk	
Inputs TERR	1 pcs.
Outputs TERR	1 pcs.
Frequency range TERR	5... 862 MHz
Through loss TERR	4...6 dB
Isolation TERR - SAT	30 dB typ.
Return loss TERR	>10 dB
Subscriber outputs	
Outputs	32 pcs.
Frequency range	5...2400 MHz
TERR type	Passive
Insertion loss SAT	2...0 dB
Insertion TERR	32 dB (±3 dB)
Max. output level subscriber SAT	102 dBµV
Max. output level subscriber TERR	50...110 dBµV (passive)
Return loss subscriber SAT	>10 dB
Return loss subscriber TERR	>10 dB
Control signal	14/18 V, 0/22 kHz, DiSEqC 1.0
Current consumption from receiver	45 mA
Connectors	
F-female	41 pcs.
DC supply voltage	Connector type DC 5.5/2.1 mm
Color code	VL = black; HL = green; VH = red; HH = yellow

Packaging Data	
Sales unit	1 pcs.
Dimensions (WxHxD) sales unit	370 x 240 x 65 mm
Packaging volume sales unit	8 dm³
Gross weight sales unit	1.4 kg
Shipping unit	1 pcs.
Dimensions (WxHxD) shipping unit	350 x 330 x 70 mm
Packaging volume shipping package	8

The DRC 0932 is a cascadable multiswitch with nine inputs for the distribution of two satellites and terrestrial signals. The polarisations are available at nine cascade outputs for the installation of further multiswitches. Commercially available DVB-S/S2 set-top-boxes or TVs with an integrated receiver can be used at the 32 subscriber outputs. Inserted terrestrial signals like DVB-T/T2, DAB or FM are available at each subscriber output as well. The very low insertion loss of the DRC 0932 is realised through an active satellite path. Through the passive terrestrial path it is possible to feed in multimedia services like "LAN over Coax", or signals from a central headend system. The LNBs can be powered by previously installed amplifiers, or the available power supply DRP 1533.

characteristics

- Cascadable multiswitch for the distribution of 8 satellite polarisations and terrestrial signals
- Passive terrestrial path
- Integrated SAT amplifier for low insertion loss
- Pre-emphasis to compensate the cable loss at high frequencies
- Terrestrial signals available at the receiver without any power supply of the multiswitch
- High screening efficiency according to Class A
- Compact dimensions paired with installation friendly distance between the F-connectors
- Colour-coded inputs and outputs
- Made in Germany
- Compatible with MagentaTV Sat, DIVEO and freenet TV

Multiswitch 13 inputs, cascade

DRC 1308

FLEXSWITCH multiswitch 13 in 8, cascade, TERR. passive

KLASSE A CLASS

Technical Data	
SAT-IF trunk	
Inputs SAT	12 pcs.
Outputs SAT	12 pcs.
Frequency range-SAT	950... 2400 MHz
Through loss SAT	1...2 dB
Decoupling SAT -SAT	30 dB typ.
Return loss SAT	> 10 dB
Terrestrial trunk	
Inputs TERR	1 pcs.
Outputs TERR	1 pcs.
Frequency range TERR	5... 862 MHz
Through loss TERR	2...3 dB
Isolation TERR - SAT	30 dB typ.
Return loss TERR	> 10 dB
Subscriber outputs	
Outputs	8 pcs.
Frequency range	5...2400 MHz
TERR type	Passive
Insertion loss SAT	4...0 dB
Insertion TERR	24 dB (±2 dB)
Max. output level subscriber SAT	102 dBµV
Max. output level subscriber TERR	50...110 dBµV (passive)
Return loss subscriber SAT	>10 dB
Return loss subscriber TERR	>10 dB
Control signal	14/18 V, 0/22 kHz, DiSEqC 1.0
Current consumption from receiver	55 mA
Connectors	
F-female	21 pcs.
DC supply voltage	Connector type DC 5.5/2.1 mm
Color code	VL = black; HL = green; VH = red; HH = yellow

Packaging Data	
Sales unit	1 pcs.
Dimensions (WxHxD) sales unit	367 x 235 x 67 mm
Packaging volume sales unit	6 dm³
Gross weight sales unit	0.93 kg
Shipping unit	1 pcs.
Dimensions (WxHxD) shipping unit	370 x 235 x 70 mm
Packaging volume shipping package	6

The DRC 1308 is a cascadable multiswitch with 13 inputs for the distribution of three satellites and terrestrial signals. The polarisations are available at 13 cascade outputs for the installation of further multiswitches. Commercially available DVB-S/S2 set-top-boxes or TVs with an integrated receiver can be used at the eight subscriber outputs. Inserted terrestrial signals like DVB-T/T2, DAB or FM are available at each subscriber output as well. The very low insertion loss of the DRC 1308 is realised through an active satellite path. Through the passive terrestrial path it is possible to feed in multimedia services like "LAN over Coax", or signals from a central headend system. The LNBs can be powered by previously installed amplifiers, or the available power supply DRP 1533.

characteristics

- Cascadable multiswitch for the distribution of 12 satellite polarisations and terrestrial signals
- Passive terrestrial path
- Integrated SAT amplifier for low insertion loss
- Pre-emphasis to compensate the cable loss at high frequencies
- Terrestrial signals available at the receiver without any power supply of the multiswitch
- High screening efficiency according to Class A
- Compact dimensions paired with installation friendly distance between the F-connectors
- Colour-coded inputs and outputs
- Made in Germany
- Compatible with MagentaTV Sat, DIVEO and freenet TV

Multiswitch 13 inputs, cascade

DRC 1312

FLEXSWITCH multiswitch 13 in 12, cascade, TERR. passive

KLASSE A CLASS

Technical Data	
SAT-IF trunk	
Inputs SAT	12 pcs.
Outputs SAT	12 pcs.
Frequency range-SAT	950... 2400 MHz
Through loss SAT	1...3 dB
Decoupling SAT -SAT	30 dB typ.
Return loss SAT	> 10 dB
Terrestrial trunk	
Inputs TERR	1 pcs.
Outputs TERR	1 pcs.
Frequency range TERR	5... 862 MHz
Through loss TERR	2...5 dB
Isolation TERR - SAT	30 dB typ.
Return loss TERR	> 10 dB
Subscriber outputs	
Outputs	12 pcs.
Frequency range	5...2400 MHz
TERR type	Passive
Insertion loss SAT	3...0 dB
Insertion TERR	28 dB (±3 dB)
Max. output level subscriber SAT	102 dBµV
Max. output level subscriber TERR	50...110 dBµV (passive)
Return loss subscriber SAT	>10 dB
Return loss subscriber TERR	>10 dB
Control signal	14/18 V, 0/22 kHz, DiSEqC 1.0
Current consumption from receiver	55 mA
Connectors	
F-female	25 pcs.
DC supply voltage	Connector type DC 5.5/2.1 mm
Color code	VL = black; HL = green; VH = red; HH = yellow

Packaging Data	
Sales unit	1 pcs.
Dimensions (WxHxD) sales unit	370 x 240 x 65 mm
Packaging volume sales unit	6 dm³
Gross weight sales unit	1.2 kg
Shipping unit	1 pcs.
Dimensions (WxHxD) shipping unit	370 x 235 x 70 mm
Packaging volume shipping package	6

The DRC 1312 is a cascadable multiswitch with 13 inputs for the distribution of three satellites and terrestrial signals. The polarisations are available at 13 cascade outputs for the installation of further multiswitches. Commercially available DVB-S/S2 set-top-boxes or TVs with an integrated receiver can be used at the 12 subscriber outputs. Inserted terrestrial signals like DVB-T/T2, DAB or FM are available at each subscriber output as well. The very low insertion loss of the DRC 1312 is realised through an active satellite path. Through the passive terrestrial path it is possible to feed in multimedia services like "LAN over Coax", or signals from a central headend system. The LNBs can be powered by previously installed amplifiers, or the available power supply DRP 1533.

characteristics

- Cascadable multiswitch for the distribution of 12 satellite polarisations and terrestrial signals
- Passive terrestrial path
- Integrated SAT amplifier for low insertion loss
- Pre-emphasis to compensate the cable loss at high frequencies
- Terrestrial signals available at the receiver without any power supply of the multiswitch
- High screening efficiency according to Class A
- Compact dimensions paired with installation friendly distance between the F-connectors
- Colour-coded inputs and outputs
- Made in Germany
- Compatible with MagentaTV Sat, DIVEO and freenet TV

Multiswitch 13 inputs, cascade

DRC 1316

FLEXSWITCH multiswitch 13 in 16, cascade, TERR. passive

KLASSE A CLASS

Technical Data	
SAT-IF trunk	
Inputs SAT	12 pcs.
Outputs SAT	12 pcs.
Frequency range-SAT	950... 2400 MHz
Through loss SAT	1...3 dB
Decoupling SAT -SAT	30 dB typ.
Return loss SAT	> 10 dB
Terrestrial trunk	
Inputs TERR	1 pcs.
Outputs TERR	1 pcs.
Frequency range TERR	5... 862 MHz
Through loss TERR	2...5 dB
Isolation TERR - SAT	30 dB typ.
Return loss TERR	> 10 dB
Subscriber outputs	
Outputs	16 pcs.
Frequency range	5...2400 MHz
TERR type	Passive
Insertion loss SAT	3...0 dB
Insertion TERR	28 dB (±3 dB)
Max. output level subscriber SAT	102 dBµV
Max. output level subscriber TERR	50...110 dBµV (passive)
Return loss subscriber SAT	>10 dB
Return loss subscriber TERR	>10 dB
Control signal	14/18 V, 0/22 kHz, DiSEqC 1.0
Current consumption from receiver	55 mA
Connectors	
F-female	29 pcs.
DC supply voltage	Connector type DC 5.5/2.1 mm
Color code	VL = black; HL = green; VH = red; HH = yellow

Packaging Data	
Sales unit	1 pcs.
Dimensions (WxHxD) sales unit	350 x 350 x 65 mm
Packaging volume sales unit	8 dm³
Gross weight sales unit	1.26 kg
Shipping unit	1 pcs.
Dimensions (WxHxD) shipping unit	350 x 330 x 70 mm
Packaging volume shipping package	8

The DRC 1316 is a cascadable multiswitch with 13 inputs for the distribution of three satellites and terrestrial signals. The polarisations are available at 13 cascade outputs for the installation of further multiswitches. Commercially available DVB-S/S2 set-top-boxes or TVs with an integrated receiver can be used at the 16 subscriber outputs. Inserted terrestrial signals like DVB-T/T2, DAB or FM are available at each subscriber output as well. The very low insertion loss of the DRC 1316 is realised through an active satellite path. Through the passive terrestrial path it is possible to feed in multimedia services like "LAN over Coax", or signals from a central headend system. The LNBs can be powered by previously installed amplifiers, or the available power supply DRP 1533.

characteristics

- Cascadable multiswitch for the distribution of 12 satellite polarisations and terrestrial signals
- Passive terrestrial path
- Integrated SAT amplifier for low insertion loss
- Pre-emphasis to compensate the cable loss at high frequencies
- Terrestrial signals available at the receiver without any power supply of the multiswitch
- High screening efficiency according to Class A
- Compact dimensions paired with installation friendly distance between the F-connectors
- Colour-coded inputs and outputs
- Made in Germany
- Compatible with MagentaTV Sat, DIVEO and freenet TV

Multiswitch 13 inputs, cascade

DRC 1324

FLEXSWITCH multiswitch 13 in 24, cascade, TERR. passive

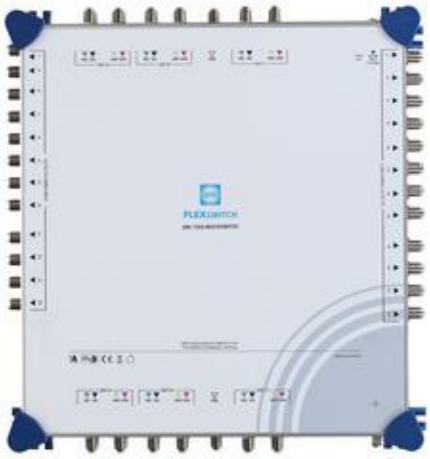

KLASSE A CLASS

Technical Data	
SAT-IF trunk	
Inputs SAT	12 pcs.
Outputs SAT	12 pcs.
Frequency range-SAT	950... 2400 MHz
Through loss SAT	2...5 dB
Decoupling SAT -SAT	30 dB typ.
Return loss SAT	> 10 dB
Terrestrial trunk	
Inputs TERR	1 pcs.
Outputs TERR	1 pcs.
Frequency range TERR	5... 862 MHz
Through loss TERR	3...5 dB
Isolation TERR - SAT	30 dB typ.
Return loss TERR	> 10 dB
Subscriber outputs	
Outputs	24 pcs.
Frequency range	5...2400 MHz
TERR type	Passive
Insertion loss SAT	2...0 dB
Insertion TERR	33 dB (±3 dB)
Max. output level subscriber SAT	102 dBµV
Max. output level subscriber TERR	50...110 dBµV (passive)
Return loss subscriber SAT	>10 dB
Return loss subscriber TERR	>10 dB
Control signal	14/18 V, 0/22 kHz, DiSEqC 1.0
Current consumption from receiver	55 mA
Connectors	
F-female	37 pcs.
DC supply voltage	Connector type DC 5.5/2.1 mm
Color code	VL = black; HL = green; VH = red; HH = yellow

Packaging Data	
Sales unit	1 pcs.
Dimensions (WxHxD) sales unit	350 x 330 x 65 mm
Packaging volume sales unit	8 dm³
Gross weight sales unit	1.76 kg
Shipping unit	1 pcs.
Dimensions (WxHxD) shipping unit	350 x 330 x 70 mm
Packaging volume shipping package	8

The DRC 1324 is a cascadable multiswitch with 13 inputs for the distribution of three satellites and terrestrial signals. The polarisations are available at 13 cascade outputs for the installation of further multiswitches. Commercially available DVB-S/S2 set-top-boxes or TVs with an integrated receiver can be used at the 24 subscriber outputs. Inserted terrestrial signals like DVB-T/T2, DAB or FM are available at each subscriber output as well. The very low insertion loss of the DRC 1324 is realised through an active satellite path. Through the passive terrestrial path it is possible to feed in multimedia services like "LAN over Coax", or signals from a central headend system. The LNBs can be powered by previously installed amplifiers, or the available power supply DRP 1533.

characteristics

- Cascadable multiswitch for the distribution of 12 satellite polarisations and terrestrial signals
- Passive terrestrial path
- Integrated SAT amplifier for low insertion loss
- Pre-emphasis to compensate the cable loss at high frequencies
- Terrestrial signals available at the receiver without any power supply of the multiswitch
- High screening efficiency according to Class A
- Compact dimensions paired with installation friendly distance between the F-connectors
- Colour-coded inputs and outputs
- Made in Germany
- Compatible with MagentaTV Sat, DIVEO and freenet TV

Multiswitch 13 inputs, cascade

DRC 1332

FLEXSWITCH multiswitch 13 in 32, cascade, TERR. passive

KLASSE A CLASS

Technical Data	
SAT-IF trunk	
Inputs SAT	12 pcs.
Outputs SAT	12 pcs.
Frequency range-SAT	950... 2400 MHz
Through loss SAT	2...5 dB
Decoupling SAT -SAT	30 dB typ.
Return loss SAT	> 10 dB
Terrestrial trunk	
Inputs TERR	1 pcs.
Outputs TERR	1 pcs.
Frequency range TERR	5... 862 MHz
Through loss TERR	3...5 dB
Isolation TERR - SAT	30 dB typ.
Return loss TERR	> 10 dB
Subscriber outputs	
Outputs	32 pcs.
Frequency range	5...2400 MHz
TERR type	Passive
Insertion loss SAT	2...0 dB
Insertion TERR	33 dB (±3 dB)
Max. output level subscriber SAT	102 dBµV
Max. output level subscriber TERR	50...110 dBµV (passive)
Return loss subscriber SAT	>10 dB
Return loss subscriber TERR	>10 dB
Control signal	14/18 V, 0/22 kHz, DiSEqC 1.0
Current consumption from receiver	55 mA
Connectors	
F-female	45 pcs.
DC supply voltage	Connector type DC 5.5/2.1 mm
Color code	VL = black; HL = green; VH = red; HH = yellow

Packaging Data	
Sales unit	1 pcs.
Dimensions (WxHxD) sales unit	350 x 350 x 65 mm
Packaging volume sales unit	8 dm³
Gross weight sales unit	1.76 kg
Shipping unit	1 pcs.
Dimensions (WxHxD) shipping unit	350 x 330 x 70 mm
Packaging volume shipping package	8

The DRC 1332 is a cascadable multiswitch with 13 inputs for the distribution of three satellites and terrestrial signals. The polarisations are available at 13 cascade outputs for the installation of further multiswitches. Commercially available DVB-S/S2 set-top-boxes or TVs with an integrated receiver can be used at the 32 subscriber outputs. Inserted terrestrial signals like DVB-T/T2, DAB or FM are available at each subscriber output as well. The very low insertion loss of the DRC 1332 is realised through an active satellite path. Through the passive terrestrial path it is possible to feed in multimedia services like "LAN over Coax", or signals from a central headend system. The LNBs can be powered by previously installed amplifiers, or the available power supply DRP 1533.

characteristics

- Cascadable multiswitch for the distribution of 12 satellite polarisations and terrestrial signals
- Passive terrestrial path
- Integrated SAT amplifier for low insertion loss
- Pre-emphasis to compensate the cable loss at high frequencies
- Terrestrial signals available at the receiver without any power supply of the multiswitch
- High screening efficiency according to Class A
- Compact dimensions paired with installation friendly distance between the F-connectors
- Colour-coded inputs and outputs
- Made in Germany
- Compatible with MagentaTV Sat, DIVEO and freenet TV

Multiswitch 17 inputs, cascade

DRC 1708

FLEXSWITCH multiswitch 17 in 8, cascade, TERR. passive

KLASSE A CLASS

Technical Data	
SAT-IF trunk	
Inputs SAT	16 pcs.
Outputs SAT	16 pcs.
Frequency range-SAT	950... 2400 MHz
Through loss SAT	1...2 dB
Decoupling SAT -SAT	30 dB typ.
Return loss SAT	> 10 dB
Terrestrial trunk	
Inputs TERR	1 pcs.
Outputs TERR	1 pcs.
Frequency range TERR	5... 862 MHz
Through loss TERR	2...3 dB
Isolation TERR - SAT	30 dB typ.
Return loss TERR	> 10 dB
Subscriber outputs	
Outputs	8 pcs.
Frequency range	5...2400 MHz
TERR type	Passive
Insertion loss SAT	2...0 dB
Insertion TERR	24 dB (±2 dB)
Max. output level subscriber SAT	102 dBµV
Max. output level subscriber TERR	50...110 dBµV (passive)
Return loss subscriber SAT	>10 dB
Return loss subscriber TERR	>10 dB
Control signal	14/18 V, 0/22 kHz, DiSEqC 1.0
Current consumption from receiver	55 mA
Connectors	
F-female	25 pcs.
DC supply voltage	Connector type DC 5.5/2.1 mm
Color code	VL = black; HL = green; VH = red; HH = yellow

Packaging Data	
Sales unit	1 pcs.
Dimensions (WxHxD) sales unit	350 x 160 x 70 mm
Packaging volume sales unit	3.7 dm³
Gross weight sales unit	0.86 kg
Shipping unit	1 pcs.
Dimensions (WxHxD) shipping unit	350 x 155 x 70 mm
Packaging volume shipping package	3,7

The DRC 1708 is a cascadable multiswitch with 17 inputs for the distribution of four satellites and terrestrial signals. The polarisations are available at 17 cascade outputs for the installation of further multiswitches. Commercially available DVB-S/S2 set-top-boxes or TVs with an integrated receiver can be used at the eight subscriber outputs. Inserted terrestrial signals like DVB-T/T2, DAB or FM are available at each subscriber output as well. The very low insertion loss of the DRC 1708 is realised through an active satellite path. Through the passive terrestrial path it is possible to feed in multimedia services like "LAN over Coax", or signals from a central headend system. The LNBs can be powered by previously installed amplifiers, or the available power supply DRP 1533.

characteristics

- Cascadable multiswitch for the distribution of 16 satellite polarisations and terrestrial signals
- Passive terrestrial path
- Integrated SAT amplifier for low insertion loss
- Pre-emphasis to compensate the cable loss at high frequencies
- Terrestrial signals available at the receiver without any power supply of the multiswitch
- High screening efficiency according to Class A
- Compact dimensions paired with installation friendly distance between the F-connectors
- Colour-coded inputs and outputs
- Made in Germany
- Compatible with MagentaTV Sat, DIVEO and freenet TV

Multiswitch 17 inputs, cascade

DRC 1712

FLEXSWITCH multiswitch 17 in 12, cascade, TERR. passive

KLASSE A CLASS

Technical Data	
SAT-IF trunk	
Inputs SAT	16 pcs.
Outputs SAT	16 pcs.
Frequency range-SAT	950... 2400 MHz
Through loss SAT	1...3 dB
Decoupling SAT -SAT	30 dB typ.
Return loss SAT	> 10 dB
Terrestrial trunk	
Inputs TERR	1 pcs.
Outputs TERR	1 pcs.
Frequency range TERR	5... 862 MHz
Through loss TERR	2...5 dB
Isolation TERR - SAT	30 dB typ.
Return loss TERR	> 10 dB
Subscriber outputs	
Outputs	12 pcs.
Frequency range	5...2400 MHz
TERR type	Passive
Insertion loss SAT	3...0 dB
Insertion TERR	28 dB (±3 dB)
Max. output level subscriber SAT	102 dBµV
Max. output level subscriber TERR	50...110 dBµV (passive)
Return loss subscriber SAT	>10 dB
Return loss subscriber TERR	>10 dB
Control signal	14/18 V, 0/22 kHz, DiSEqC 1.0
Current consumption from receiver	55 mA
Connectors	
F-female	29 pcs.
DC supply voltage	Connector type DC 5.5/2.1 mm
Color code	VL = black; HL = green; VH = red; HH = yellow

Packaging Data	
Sales unit	1 pcs.
Dimensions (WxHxD) sales unit	370 x 240 x 65 mm
Packaging volume sales unit	6 dm³
Gross weight sales unit	1.22 kg
Shipping unit	1 pcs.
Dimensions (WxHxD) shipping unit	370 x 235 x 70 mm
Packaging volume shipping package	6

The DRC 1712 is a cascadable multiswitch with 17 inputs for the distribution of four satellites and terrestrial signals. The polarisations are available at 17 cascade outputs for the installation of further multiswitches. Commercially available DVB-S/S2 set-top-boxes or TVs with an integrated receiver can be used at the 12 subscriber outputs. Inserted terrestrial signals like DVB-T/T2, DAB or FM are available at each subscriber output as well. The very low insertion loss of the DRC 1712 is realised through an active satellite path. Through the passive terrestrial path it is possible to feed in multimedia services like "LAN over Coax", or signals from a central headend system. The LNBs can be powered by previously installed amplifiers, or the available power supply DRP 1533.

characteristics

- Cascadable multiswitch for the distribution of 16 satellite polarisations and terrestrial signals
- Passive terrestrial path
- Integrated SAT amplifier for low insertion loss
- Pre-emphasis to compensate the cable loss at high frequencies
- Terrestrial signals available at the receiver without any power supply of the multiswitch
- High screening efficiency according to Class A
- Compact dimensions paired with installation friendly distance between the F-connectors
- Colour-coded inputs and outputs
- Made in Germany
- Compatible with MagentaTV Sat, DIVEO and freenet TV

Multiswitch 17 inputs, cascade

DRC 1716

FLEXSWITCH multiswitch 17 in 16, cascade, TERR. passive

KLASSE A CLASS

Technical Data	
SAT-IF trunk	
Inputs SAT	16 pcs.
Outputs SAT	16 pcs.
Frequency range-SAT	950... 2400 MHz
Through loss SAT	1...3 dB
Decoupling SAT -SAT	30 dB typ.
Return loss SAT	> 10 dB
Terrestrial trunk	
Inputs TERR	1 pcs.
Outputs TERR	1 pcs.
Frequency range TERR	5... 862 MHz
Through loss TERR	2...5 dB
Isolation TERR - SAT	30 dB typ.
Return loss TERR	> 10 dB
Subscriber outputs	
Outputs	16 pcs.
Frequency range	5...2400 MHz
TERR type	Passive
Insertion loss SAT	3...0 dB
Insertion TERR	28 dB (±3 dB)
Max. output level subscriber SAT	102 dBµV
Max. output level subscriber TERR	50...110 dBµV (passive)
Return loss subscriber SAT	>10 dB
Return loss subscriber TERR	>10 dB
Control signal	14/18 V, 0/22 kHz, DiSEqC 1.0
Current consumption from receiver	55 mA
Connectors	
F-female	33 pcs.
DC supply voltage	Connector type DC 5.5/2.1 mm
Color code	VL = black; HL = green; VH = red; HH = yellow

Packaging Data	
Sales unit	1 pcs.
Dimensions (WxHxD) sales unit	370 x 240 x 65 mm
Packaging volume sales unit	6 dm³
Gross weight sales unit	1.22 kg
Shipping unit	1 pcs.
Dimensions (WxHxD) shipping unit	370 x 235 x 70 mm
Packaging volume shipping package	6

The DRC 1716 is a cascadable multiswitch with 17 inputs for the distribution of four satellites and terrestrial signals. The polarisations are available at 17 cascade outputs for the installation of further multiswitches. Commercially available DVB-S/S2 set-top-boxes or TVs with an integrated receiver can be used at the 16 subscriber outputs. Inserted terrestrial signals like DVB-T/T2, DAB or FM are available at each subscriber output as well. The very low insertion loss of the DRC 1716 is realised through an active satellite path. Through the passive terrestrial path it is possible to feed in multimedia services like "LAN over Coax", or signals from a central headend system. The LNBs can be powered by previously installed amplifiers, or the available power supply DRP 1533.

characteristics

- Cascadable multiswitch for the distribution of 16 satellite polarisations and terrestrial signals
- Passive terrestrial path
- Integrated SAT amplifier for low insertion loss
- Pre-emphasis to compensate the cable loss at high frequencies
- Terrestrial signals available at the receiver without any power supply of the multiswitch
- High screening efficiency according to Class A
- Compact dimensions paired with installation friendly distance between the F-connectors
- Colour-coded inputs and outputs
- Made in Germany
- Compatible with MagentaTV Sat, DIVEO and freenet TV

Multiswitch 17 inputs, cascade

DRC 1724

FLEXSWITCH multiswitch 17 in 24, cascade, TERR. passive

KLASSE A CLASS

Technical Data	
SAT-IF trunk	
Inputs SAT	16 pcs.
Outputs SAT	16 pcs.
Frequency range-SAT	950... 2400 MHz
Through loss SAT	2...5 dB
Decoupling SAT -SAT	30 dB typ.
Return loss SAT	> 10 dB
Terrestrial trunk	
Inputs TERR	1 pcs.
Outputs TERR	1 pcs.
Frequency range TERR	5... 862 MHz
Through loss TERR	3...5 dB
Isolation TERR - SAT	30 dB typ.
Return loss TERR	> 10 dB
Subscriber outputs	
Outputs	24 pcs.
Frequency range	5...2400 MHz
TERR type	Passive
Insertion loss SAT	2...0 dB
Insertion TERR	33 dB (±3 dB)
Max. output level subscriber SAT	102 dBµV
Max. output level subscriber TERR	50...110 dBµV (passive)
Return loss subscriber SAT	>10 dB
Return loss subscriber TERR	>10 dB
Control signal	14/18 V, 0/22 kHz, DiSEqC 1.0
Current consumption from receiver	55 mA
Connectors	
F-female	41 pcs.
DC supply voltage	Connector type DC 5.5/2.1 mm
Color code	VL = black; HL = green; VH = red; HH = yellow

Packaging Data	
Sales unit	1 pcs.
Dimensions (WxHxD) sales unit	330 x 350 x 67 mm
Packaging volume sales unit	8 dm³
Gross weight sales unit	1.79 kg
Shipping unit	1 pcs.
Dimensions (WxHxD) shipping unit	350 x 330 x 70 mm
Packaging volume shipping package	8

The DRC 1724 is a cascadable multiswitch with 17 inputs for the distribution of four satellites and terrestrial signals. The polarisations are available at 17 cascade outputs for the installation of further multiswitches. Commercially available DVB-S/S2 set-top-boxes or TVs with an integrated receiver can be used at the 24 subscriber outputs. Inserted terrestrial signals like DVB-T/T2, DAB or FM are available at each subscriber output as well. The very low insertion loss of the DRC 1724 is realised through an active satellite path. Through the passive terrestrial path it is possible to feed in multimedia services like "LAN over Coax", or signals from a central headend system. The LNBs can be powered by previously installed amplifiers, or the available power supply DRP 1533.

characteristics

- Cascadable multiswitch for the distribution of 16 satellite polarisations and terrestrial signals
- Passive terrestrial path
- Integrated SAT amplifier for low insertion loss
- Pre-emphasis to compensate the cable loss at high frequencies
- Terrestrial signals available at the receiver without any power supply of the multiswitch
- High screening efficiency according to Class A
- Compact dimensions paired with installation friendly distance between the F-connectors
- Colour-coded inputs and outputs
- Made in Germany
- Compatible with MagentaTV Sat, DIVEO and freenet TV

Multiswitch 17 inputs, cascade

DRC 1732

FLEXSWITCH multiswitch 17 in 32, cascade, TERR. passive

KLASSE A CLASS

Technical Data	
SAT-IF trunk	
Inputs SAT	16 pcs.
Outputs SAT	16 pcs.
Frequency range-SAT	950... 2400 MHz
Through loss SAT	2...6 dB
Decoupling SAT -SAT	30 dB typ.
Return loss SAT	> 10 dB
Terrestrial trunk	
Inputs TERR	1 pcs.
Outputs TERR	1 pcs.
Frequency range TERR	5... 862 MHz
Through loss TERR	3...5 dB
Isolation TERR - SAT	30 dB typ.
Return loss TERR	> 10 dB
Subscriber outputs	
Outputs	32 pcs.
Frequency range	5...2400 MHz
TERR type	Passive
Insertion loss SAT	2...0 dB
Insertion TERR	33 dB (±3 dB)
Max. output level subscriber SAT	102 dBµV
Max. output level subscriber TERR	50...110 dBµV (passive)
Return loss subscriber SAT	>10 dB
Return loss subscriber TERR	>10 dB
Control signal	14/18 V, 0/22 kHz, DiSEqC 1.0
Current consumption from receiver	55 mA
Connectors	
F-female	49 pcs.
DC supply voltage	Connector type DC 5.5/2.1 mm
Color code	VL = black; HL = green; VH = red; HH = yellow

Packaging Data	
Sales unit	1 pcs.
Dimensions (WxHxD) sales unit	350 x 350 x 65 mm
Packaging volume sales unit	8 dm³
Gross weight sales unit	1.82 kg
Shipping unit	1 pcs.
Dimensions (WxHxD) shipping unit	350 x 330 x 70 mm
Packaging volume shipping package	8

The DRC 1732 is a cascadable multiswitch with 17 inputs for the distribution of four satellites and terrestrial signals. The polarisations are available at 17 cascade outputs for the installation of further multiswitches. Commercially available DVB-S/S2 set-top-boxes or TVs with an integrated receiver can be used at the 32 subscriber outputs. Inserted terrestrial signals like DVB-T/T2, DAB or FM are available at each subscriber output as well. The very low insertion loss of the DRC 1732 is realised through an active satellite path. Through the passive terrestrial path it is possible to feed in multimedia services like "LAN over Coax", or signals from a central headend system. The LNBs can be powered by previously installed amplifiers, or the available power supply DRP 1533.

characteristics

- Cascadable multiswitch for the distribution of 16 satellite polarisations and terrestrial signals
- Passive terrestrial path
- Integrated SAT amplifier for low insertion loss
- Pre-emphasis to compensate the cable loss at high frequencies
- Terrestrial signals available at the receiver without any power supply of the multiswitch
- High screening efficiency according to Class A
- Compact dimensions paired with installation friendly distance between the F-connectors
- Colour-coded inputs and outputs
- Made in Germany
- Compatible with MagentaTV Sat, DIVEO and freenet TV

Amplifiers FLEXSWITCH

DRA 0505

FLEXSWITCH line amplifier, for one satellite

KLASSE A CLASS

Technical Data	
SAT-IF trunk	
Inputs SAT	4 pcs.
Frequency range-SAT	950...2200 MHz
Gain SAT	22...26 dB
Attenuation SAT	0...10 dB
Max. output level SAT	116 dBµV (IMA3)
Equalization SAT	4 dB
Decoupling SAT -SAT	30 dB typ.
Return loss SAT	12 dB
Noise figure	8 dB
Terrestrial trunk	
Inputs TERR	1 pcs.
Frequency range TERR	10...862 MHz
Gain TERR	20 dB
Attenuation TERR	0...10 dB
Max. output level TERR	110 dBµV (IMA3)
Isolation TERR - SAT	30 dB typ.
Return loss TERR	12 dB
Noise figure	5 dB
Connectors	
F-female	10 pcs.
DC supply voltage	Connector type DC 5.5/2.1 mm
General data	
Operating voltage	12...18 V DC
Current consumption	220 mA
Screening factor	Class A, according to EN 50083-2
Impedance	75 Ω
Operating temperature range	-20...+50 °C
Weight	0,35 kg
Dimensions (width x height x depth)	160 x 127 x 61 mm

Packaging Data	
Sales unit	1 pcs.
Dimensions (WxHxD) sales unit	265 x 170 x 70 mm
Packaging volume sales unit	dm^3
Gross weight sales unit	0.48 kg
Shipping unit	1 pcs.
Dimensions (WxHxD) shipping unit	mm
Packaging volume shipping package	

The DRA 0505 is an amplifier for 4 polarizations of one satellite and terrestrial signals. With a gain of 26 dB the DRA 0505 is optimally suited for use as line amplifier in multi-switch cascades. The gain can be individually reduced by 10 dB at each input, in order to compensate differences in level between the individual polarizations. The supply voltage can be realized either locally, through the optional power supply DRP 1533 or via remote power at the trunk lines.

characteristics

- Line amplifier for one satellite and terrestrial signals
- Mechanically compatible with DRC 05xx
- Adjustable gain from 16...26 dB at each input
- Remote-powered via the SAT-IF trunk lines
- Switchable DC bypass
- High screening efficiency according to Class A
- Made in Germany

Amplifiers FLEXSWITCH

DRA 0909

FLEXSWITCH line amplifier, for two satellites

KLASSE A CLASS

Technical Data	
SAT-IF trunk	
Inputs SAT	8 pcs.
Frequency range-SAT	950...2200 MHz
Gain SAT	22...26 dB
Attenuation SAT	0...10 dB
Max. output level SAT	116 dBµV (IMA3)
Equalization SAT	4 dB
Decoupling SAT -SAT	30 dB typ.
Return loss SAT	12 dB
Noise figure	8 dB
Terrestrial trunk	
Inputs TERR	1 pcs.
Frequency range TERR	10...862 MHz
Gain TERR	20 dB
Attenuation TERR	0...10 dB
Max. output level TERR	110 dBµV (IMA3)
Isolation TERR - SAT	30 dB typ.
Return loss TERR	12 dB
Noise figure	5 dB
Connectors	
F-female	10 pcs.
DC supply voltage	Connector type DC 5.5/2.1 mm
General data	
Operating voltage	12...18 V DC
Current consumption	420 mA
Screening factor	Class A, according to EN 50083-2
Impedance	75 Ω
Operating temperature range	-20...+50 °C
Weight	0,41 kg
Dimensions (width x height x depth)	160 x 110 x 61 mm

Packaging Data	
Sales unit	1 pcs.
Dimensions (WxHxD) sales unit	265 x 170 x 70 mm
Packaging volume sales unit	dm^3
Gross weight sales unit	0.54 kg
Shipping unit	1 pcs.
Dimensions (WxHxD) shipping unit	mm
Packaging volume shipping package	

The DRA 0909 is an amplifier for 8 polarizations of two satellite and terrestrial signals. With a gain of 26 dB the DRA 0909 is optimally suited for use as line amplifier in multi-switch cascades. The gain can be individually reduced by 10 dB at each input, in order to compensate differences in level between the individual polarizations. The supply voltage can be realized either locally, through the optional power supply DRP 1533 or via remote power at the trunk lines.

characteristics

- Line amplifier for 2 satellite and terrestrial signals
- Mechanically compatible with DRC 09xx
- Adjustable gain from 16...26 dB at each input
- Remote-powered via the SAT-IF trunk lines
- Switchable DC bypass
- High screening efficiency according to Class A
- Made in Germany

Amplifiers FLEXSWITCH

DRA 1313

FLEXSWITCH line amplifier, for three satellites

KLASSE A CLASS

Technical Data	
SAT-IF trunk	
Inputs SAT	12 pcs.
Frequency range-SAT	950...2200 MHz
Gain SAT	22...26 dB
Attenuation SAT	0...10 dB
Max. output level SAT	116 dBµV (IMA3)
Equalization SAT	4 dB
Decoupling SAT -SAT	30 dB typ.
Return loss SAT	12 dB
Noise figure	8 dB
Terrestrial trunk	
Inputs TERR	1 pcs.
Frequency range TERR	10...862 MHz
Gain TERR	20 dB
Attenuation TERR	0...10 dB
Max. output level TERR	110 dBµV (IMA3)
Isolation TERR - SAT	30 dB typ.
Return loss TERR	12 dB
Noise figure	5 dB
Connectors	
F-female	10 pcs.
DC supply voltage	Connector type DC 5.5/2.1 mm
General data	
Operating voltage	12...18 V DC
Current consumption	600 mA
Screening factor	Class A, according to EN 50083-2
Impedance	75 Ω
Operating temperature range	-20...+50 °C
Weight	0,60 kg
Dimensions (width x height x depth)	160 x 247 x 61 mm

Packaging Data	
Sales unit	1 pcs.
Dimensions (WxHxD) sales unit	265 x 170 x 70 mm
Packaging volume sales unit	dm^3
Gross weight sales unit	0.54 kg
Shipping unit	1 pcs.
Dimensions (WxHxD) shipping unit	mm
Packaging volume shipping package	

The DRA 1313 is an amplifier for 12 polarizations of three satellite and terrestrial signals. With a gain of 26 dB the DRA 1313 is optimally suited for use as line amplifier in multi-switch cascades. The gain can be individually reduced by 10 dB at each input, in order to compensate differences in level between the individual polarizations. The supply voltage can be realized either locally, through the optional power supply DRP 1533 or via remote power at the trunk lines.

characteristics

- Line amplifier for 3 satellite and terrestrial signals
- Mechanically compatible with DRC 13xx
- Adjustable gain from 16...26 dB at each input
- Remote-powered via the SAT-IF trunk lines
- Switchable DC bypass
- High screening efficiency according to Class A
- Made in Germany

Amplifiers FLEXSWITCH

DRA 1717

FLEXSWITCH line amplifier, for four satellites

KLASSE A CLASS

Technical Data	
SAT-IF trunk	
Inputs SAT	16 pcs.
Frequency range-SAT	950...2200 MHz
Gain SAT	22...26 dB
Attenuation SAT	0...10 dB
Max. output level SAT	116 dBµV (IMA3)
Equalization SAT	4 dB
Decoupling SAT -SAT	30 dB typ.
Return loss SAT	12 dB
Noise figure	8 dB
Terrestrial trunk	
Inputs TERR	1 pcs.
Frequency range TERR	10...862 MHz
Gain TERR	20 dB
Attenuation TERR	0...10 dB
Max. output level TERR	110 dBµV (IMA3)
Isolation TERR - SAT	30 dB typ.
Return loss TERR	12 dB
Noise figure	5 dB
Connectors	
F-female	10 pcs.
DC supply voltage	Connector type DC 5.5/2.1 mm
General data	
Operating voltage	12...18 V DC
Current consumption	800 mA
Screening factor	Class A, according to EN 50083-2
Impedance	75 Ω
Operating temperature range	-20...+50 °C
Weight	0,65 kg
Dimensions (width x height x depth)	160 x 247 x 61 mm

Packaging Data	
Sales unit	1 pcs.
Dimensions (WxHxD) sales unit	265 x 170 x 70 mm
Packaging volume sales unit	dm^3
Gross weight sales unit	0.78 kg
Shipping unit	1 pcs.
Dimensions (WxHxD) shipping unit	mm
Packaging volume shipping package	

The DRA 1717 is an amplifier for 16 polarizations of four satellite and terrestrial signals. With a gain of 26 dB the DRA 1717 is optimally suited for use as line amplifier in multi-switch cascades. The gain can be individually reduced by 10 dB at each input, in order to compensate differences in level between the individual polarizations. The supply voltage can be realized either locally, through the optional power supply DRP 1533 or via remote power at the trunk lines.

characteristics

- Line amplifier for 4 satellite and terrestrial signals
- Mechanically compatible with DRC 17xx
- Adjustable gain from 16...26 dB at each input
- Remote-powered via the SAT-IF trunk lines
- Switchable DC bypass
- High screening efficiency according to Class A
- Made in Germany

Taps/Splitter FLEXSWITCH

DRX 5002 A

FLEXSWITCH distributor, 2-way for one satellite

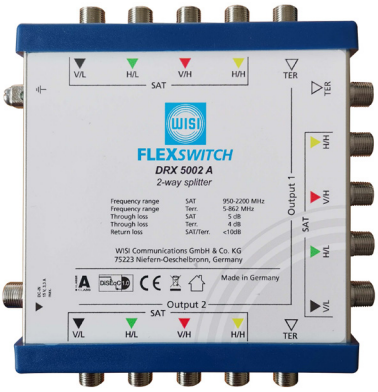

Technical Data	
SAT-IF trunk	
Inputs SAT	4 pcs.
Frequency range-SAT	950...2200 MHz
Decoupling SAT -SAT	40 dB
Return loss SAT	10 dB
Terrestrial trunk	
Inputs TERR	1 pcs.
Frequency range TERR	5...862 MHz
Isolation TERR - SAT	30 dB
Return loss TERR	10 dB
Distribution outputs	
Outputs SAT	8 pcs.
Outputs TERR	2 pcs.
Frequency range	5...2200 MHz
Distribution loss SAT	3,5...4,1 dB (±0,5 dB)
Distribution loss TERR	3,2...4,1 dB (±0,5 dB)
Return loss	10 dB
Connectors	
F-female	16 pcs.
General data	
Screening factor	Class A, according to EN 50083-2
Impedance	75 Ω
Operating temperature range	-20...+50 °C
Weight	0,39 kg
Dimensions (width x height x depth)	136 x 136 x 31 mm

Packaging Data	
Sales unit	1 pcs.
Dimensions (WxHxD) sales unit	210 x 150 x 55 mm
Packaging volume sales unit	1.7 dm³
Gross weight sales unit	0.41 kg
Shipping unit	1 pcs.
Dimensions (WxHxD) shipping unit	210 x 150 x 55 mm
Packaging volume shipping package	1,7

characteristics

- Passive 2-way splitter for one satellite and terrestrial signals
- High screening efficiency according to Class A
- Compact dimensions paired with installation friendly distance between the F connectors
- Made in Germany

Taps/Splitter FLEXSWITCH

DRX 9002

FLEX SWITCH distributor, 2-fold for two satellites

Technical Data	
SAT-IF trunk	
Inputs SAT	8 pcs.
Frequency range-SAT	950...2200 MHz
Decoupling SAT -SAT	30 dB typ.
Return loss SAT	10 dB
Terrestrial trunk	
Inputs TERR	1 pcs.
Frequency range TERR	5...862 MHz
Isolation TERR - SAT	30 dB typ.
Return loss TERR	10 dB
Distribution outputs	
Outputs SAT	16 pcs.
Outputs TERR	2 pcs.
Frequency range	5...2200 MHz
Distribution loss SAT	6 dB (±1 dB)
Distribution loss TERR	4,5 dB (±1 dB)
Return loss	10 dB
Connectors	
F-female	27 pcs.
General data	
Screening factor	Class A, according to EN 50083-2
Impedance	75 Ω
Operating temperature range	-20...+50 °C
Weight	0,44 kg
Dimensions (width x height x depth)	220 x 71 x 45 mm

Packaging Data	
Sales unit	1 pcs.
Dimensions (WxHxD) sales unit	280 x 800 x 50 mm
Packaging volume sales unit	0.88 dm³
Gross weight sales unit	0.48 kg
Shipping unit	1 pcs.

Packaging Data	
Dimensions (WxHxD) shipping unit	220 x 80 x 50 mm
Packaging volume shipping package	0,88

The DRX 9002 is a passive 2-way distributor for distributing signals from two satellites and terrestrial signals from one trunk line to two lines. Due to its low distribution attenuation, the distributor is ideal for the construction of multiswitch cascades. If the optional DRP 1533 power supply unit is operated on DRX 9002, the connected LNBs are supplied with DC operating voltage. An additional transmission of this operating voltage to the master line for feeding downstream amplifiers is possible via an integrated switch.

characteristics

- Passive 2-way splitter for two satellite and terrestrial signals
- Switchable DC bypass for LNB powering
- High screening efficiency according to Class A
- Compact dimensions paired with installation friendly distance between the F connectors
- Made in Germany

Accessories FLEXSWITCH

ODR 0508

Power supply system, Quattro incl. Multiswitch

Technical Data	
OC 04 D	
Subscriber	Depending on the multiswitch
Type	QUATTRO
Input frequency	10,70...11,70/11,70...12,75 GHz (Low-Band/High-Band)
Oscillator frequency	9,75/10,6 GHz (Low-Band/High-Band)
Output frequency	950...2150 MHz
Connectors	
F-female	4 pcs.
General data	
LNB supply voltage	11...21 V
Power consumption max.	200 mA
Color	Light grey (RAL 7035)
Feed diameter	40 mm
Operating temperature range	-30...+60 °C
DRR 0508	
SAT-IF trunk	
Inputs SAT	4 pcs.
Frequency range-SAT	950...2400 MHz
Decoupling SAT -SAT	30 dB typ.
Return loss SAT	>10 dB
Terrestrial trunk	
Inputs TERR	1 pcs.
Frequency range TERR	5...862 MHz
Isolation TERR - SAT	30 dB typ.
Return loss TERR	>10 dB
Subscriber outputs	
Outputs	8 pcs.
Frequency range	5...2400 MHz
TERR type	Passive
Insertion loss SAT	0...-5 dB

Packaging Data	
Sales unit	pcs.
Dimensions (WxHxD) sales unit	mm
Packaging volume sales unit	dm^3
Gross weight sales unit	kg
Shipping unit	pcs.
Dimensions (WxHxD) shipping unit	mm
Packaging volume shipping package	

Package consisting of 1x Quattro LNB OC 04 E and 1x receiver powered multiswitch DRR 0508

Accessories FLEXSWITCH

DRP 1533

WAll wart 230 V AC, 15 V DC

The DRP 1533 is a wall wart with 230 V AC, 50/60 Hz and has a output power fron 15 V DC. It is usable for the FLEXSWITCH series.

Technical Data	
General data	
Connector	Connector type DC 5.5/2.1 mm
Input voltage	100..240 V AC (50/60 Hz)
Operating range	90...264 V AC (50/60 Hz)
Output voltage	15 V DC
Max. output current	3,3 A
Max. output power	49,5 W
Average operational efficiency	87,8 %
Low load efficiency (10%)	80,6 %
Max. humidity, non condensing	75 %
Protection class	II
Protection class system EN 60529 (DIN 40050)	IP40
Electrical safety standard	EN 60950-1
EMC	EN 50083-2
Dimensions W x H x D	116 x 33 x 51 mm
Operating temperature range	-20...+40 °C
Storage temperature	-10...+80 °C

Packaging Data	
Sales unit	1 pcs.
Dimensions (WxHxD) sales unit	170 x 130 x 52 mm
Packaging volume sales unit	1.1 dm^3
Gross weight sales unit	0.44 kg
Shipping unit	1 pcs.
Dimensions (WxHxD) shipping unit	170 x 130 x 50 mm
Packaging volume shipping package	1,1

characteristics

- Operating voltage 230 V AC
- Output power 15 V DC
- Output current 3,3 A

Optical SAT distribution

WISI Optical SAT distribution:
Unlimited distribution via fiber optics.

The new OL series revolutionizes SAT reception and conventional distribution technology. The optical transmission of satellite signals, terrestrial signals and radio signals is particularly convincing ...

- for projects in which the digital signals are centrally and an almost unlimited number of the number of participants is to be made available
- for extensive structures, in which no signal and quality losses may occur.
- through an efficient and cost-oriented installation. Optical cables are faster and more space-saving to install. and cheaper than the comparable version with coaxial cables.

At a glance

- Galvanic separation of the individual building parts/buildings
- Low susceptibility to faults
- Future-proof
- Virtually loss- and interference-free transmission
- Efficient and clean installation
- Consistently good signal quality
- Highest flexibility
- Low Smoke Zero Halogen Compliant (LSZH)
- Reception of all transponders of a satellite
- A reception system for hundreds of participants
- Aesthetic building views, since only one central reception antenna is required
- One fiber optic cable replaces several coaxial cables
- Considerable cost savings compared to alternative channel processing solutions

Optical Transmitter Kit

OL 16 1310

Optical Transmitter Kit

Technical Data	
OL 17 1310 / Optical Converter	
Input	
Frequency range-SAT	290...2340 MHz
Impedance	75 Ω
Return loss	20 dB (optical)
Frequency range DVB-T	470...694 MHz
Frequency range DAB	174...240 MHz
Frequency range FM	88...108 MHz
Level range	70...85 dBµV (Satellite); 70 dBµV (Terrestrial)
Ripple	1 dB
Gain variation full band	FM 88...108 MHz <1 dB; -DAB 174...240 MHz<1 dB; Terr. (DVB-T) 479...694 MHz <3...5 dB; SAT ≤3 dB; Rejection @4G800 frequencies 791...862 MHz (relative)>30 dB
Connector DVB-T, DAB, FM	1x F-female
Connector SAT	2x F-female
Output	
Wavelength	1310 nm (±20 nm)
Optical power	+ 8 dBm
Connector	FC/PC
General data	
Input voltage	20 V DC
Current consumption	max. 350 mA (without connected devices)
Maximum upstream current	500 mA
Output Voltage Vertical	12 V
Output voltage Horizental	18 V
Operating temperature	-20...+60 °C
Weight	0.445 kg
Dimensions W x H x D	160 x 25 x 162 mm
Wideband LNB OC07	
Electrical data	
Input frequency	10.70...12.75 GHz
Local Oscillator Frequency	10.41 GHz

Packaging Data	
Sales unit	1 pcs.
Dimensions (WxHxD) sales unit	270 x 190 x 60 mm
Packaging volume sales unit	3.08 dm³
Gross weight sales unit	0.6 kg
Shipping unit	1 pcs.
Dimensions (WxHxD) shipping unit	270 x 190 x 60 mm
Packaging volume shipping package	3,08

characteristics

- Kit includes Wideband LNB and electrical/optical converter
- Transmission of Satellite, terrestrial and radio signals via one optical fibre
- Insertion of DVB-T/T2, DAB and FM at the terrestrial input
- Optical wavelength 1310 nm
- + 8 dBm optical output power
- Wall or pole mount

Kit for the conversion of one satellite, DVB-T/T2, DAB and FM into an optical output signal. The OL16 1310 kit contains of the wideband LNB OC 07E and the electrical/optical converter OL 17 1310. Designed for outdoor use, the installation can be done directly at the mast pipe (mounting bracket included started from Q2/2022). The optical transmission is done at 1310nm with an optical level of +8 dBm, which enables the distribution of up to 64 termination points. The whole KIT gets powered via the included 20V power supply (EU and UK adapter).

Optical taps

OL 92 0010
Optical 90/10 splitter

OL 92 0020
Optical 80/20 splitter

OL 92 0030
Optical 70/30 splitter

OL 92 0040
Optical 60/40 splitter

characteristics

- FC/PC connectors
- FBT - Technology (Fused Biconical Tapered)
- Wide range splitter 1260...1650 nm
- Max. input power: 25 dBm

Technical Data				
Wavelength	1260...1650 nm	1260...1650 nm	1260...1650 nm	1260...1650 nm
Coupling ratio	90/10	80/20	70/30	60/40
Insertion loss output 1	0,9 dB	1,5 dB	2,1 dB	2,6 dB
Insertion loss output 2	10,6 dB	7,6 dB	5,8 dB	4,4 dB
Operating temperature range	-40...+75 °C	-40...+75 °C	-40...+75 °C	-40...+75 °C
Connector	FC/PC	FC/PC	FC/PC	FC/PC
Dimensions (width x height x depth)	114 x 157 x 20 mm	114 x 157 x 20 mm	114 x 157 x 20 mm	114 x 157 x 20 mm

Optical splitter

OL 91 0002
Optical 2-way splitter

OL 91 0003
Optical 3-way splitter

OL 91 0004
Optical 4-way splitter

characteristics

- FC/PC connectors
- FBT - Technology (Fused Biconical Tapered)
- Dual Window splitter 1310 / 1550 nm
- Max. input power: 25 dBm

Technical Data			
Number of outputs	02	03	04
Wavelength	1310/1550 nm	1310/1550 nm	1260...1650 nm
Insertion loss	3,6 dB	5,6 dB	7 dB
Connector	FC/PC	FC/PC	FC/PC
Operating temperature range	-40...+75 °C	-40...+75 °C	-40...+75 °C
Dimensions (width x height x depth)	114 x 157 x 20 mm	114 x 157 x 20 mm	114 x 157 x 20 mm

Optical splitter

OL 91 0008

Optical 8-way splitter

OL 91 0016

Optical 16-way splitter

OL 91 0032

Optical 32-way splitter

characteristics

- FC/PC connectors
- PLC - Technology (Planar Light-wave Circuit)
- Wide range splitter 1260...1650 nm
- Max. input power: 23 dBm

Technical Data			
Number of outputs	08	16	32
Wavelength	1260...1650 nm	1260...1650 nm	1260...1650 nm
Insertion loss	10,2 dB	13,6 dB	16,8 dB
Connector	FC/PC	FC/PC	FC/PC
Operating temperature range	-40...+75 °C	-40...+75 °C	-40...+75 °C
Dimensions (width x height x depth)	114 x 157 x 20 mm	175 x 163 x 50 mm	175 x 163 x 50 mm

HIPER ANTENA

Optical converter

OL 21 0003

Optical quad converter III

Technical Data	
Input frequency SAT	0,95...5,45 GHz (stacked)
Return loss	10 dB
Wavelength	1100...1650 nm
Input power	-15...0 dBm
Output frequency	4 x SAT + TERR.
Output level	70 dBµV
Control signal	11...14,5 V (vertical)
Control signal	15,5...19 V (horizontal)
Control signal	0/22 kHz (Low / High Band)
Input frequency TERR	88...108/ 174...240/ 470...790 MHz
General data	
Connector input	FC/PC
Output	4 participants outputs
Supply voltage	Receiver, ext. power supply 10...20 V DC (optional)
Current consumption	225 mA @ 10V Output 1/2, 225 mA @ 10V Output 3/4
Output impedance	75 Ω
Ambient temperature	-15...+55 °C

characteristics

- Back conversion of the optical signal into original frequency position
- Power supply by the subsequently connected devices or optional 20 V DC power supply (OLPS 0230)
- FC/PC - connector
- Direct connection of 4 stb without an additional multiswitch
- Compact design (optimized for the installation in living rooms)
- Simplified installation
- Satellite- and terrestrial signal to each participant output available

Quad converter for the conversion of the optical input signal into 4 independent subscriber outputs. Converted will be all inserted signals (DVB-S/S2, DVB-T/T2, DAB and FM). Re-design in compact form factor and simplified installation. Power supply by the connected stb or TV sets with integrated satellite receiver or the optional power supply OLPS 0230.

OL 22 0003

Optical quatro converter III

Technical Data	
Input frequency SAT	0,95...5,45 GHz (stacked)
Return loss	10 dB
Wavelength	1100...1650 nm
Input power	-15...0 dBm
Output frequency	1xHH, 1xVH, 1xHL, 1xVL, 1xTERR
Output level	80 dBµV
Control signal	11...14,5 V (vertical)
Control signal	15,5...19 V (horizontal)
Control signal	0/22 kHz (Low / High Band)
Input frequency TERR	88...108/ 174...240/ 470...790 MHz
General data	
Connector input	FC/PC
Output	Multiswitch
Supply voltage	Multiswitch, ext. power supply 10...20 V DC
Current consumption	400 mA @ 10V
Output impedance	75 Ω
Ambient temperature	-15...+55 °C

characteristics

- Back conversion of the optical signal into original frequency position
- Output signals: HH, VH, HL, VL and terrestrial
- Power supply by the subsequently connected devices or optional 20 V DC power supply (OLPS 0230)
- FC/PC - connector

Quatro-way back converter for the change of the optical input signal in several HF-areas: SAT (HH,VH,HL,VL) and terrestrial. Application for multiswitch systems or headends. Power supply via multiswitch or via the optional AC adapter OLPS 0230. Redesign in a compact construction for easy mounting.

HIPER SAT

Optical cables

OL 95 1001
Optical cable term. 1 m

OL 95 1003
Optical cable term. 3 m

OL 95 1005
Optical cable term. 5 m

characteristics

- Low-Smoke-Zero-Halogen-compliant (LSZH)
- Galvanic isolation
- No interferneces by electo-magnetic fields
- Integrated protection against tensile stengths and rodents

Technical Data			
Buffered fiber			
Fiber type	G657A	G657A	G657A
Outer diameter	0,9 mm	0,9 mm	0,9 mm
Material	PVC	PVC	PVC
Typical attenuation	<0,25 dB/km @ 1550 nm; <0,4 dB/km @ 1310 nm	<0,25 dB/km @ 1550 nm; <0,4 dB/km @ 1310 nm	<0,25 dB/km @ 1550 nm; <0,4 dB/km @ 1310 nm
SS tube			
Material	SUS304	SUS304	SUS304
Outer diameter	1,65 mm ± 0,05 mm	1,65 mm ± 0,05 mm	1,65 mm ± 0,05 mm
Width	0,85 mm ± 0,05 mm	0,85 mm ± 0,05 mm	0,85 mm ± 0,05 mm
Thickness	0,25 mm ± 0,02 mm	0,25 mm ± 0,02 mm	0,25 mm ± 0,02 mm
Clearance	0,25 mm ± 0,02 mm	0,25 mm ± 0,02 mm	0,25 mm ± 0,02 mm
Aramid yarn			
Type	1000dtex	1000dtex	1000dtex
Sheath			
Material	LSZH-Compound	LSZH-Compound	LSZH-Compound
Outer diameter	2,9 mm ± 0,05 mm	2,9 mm ± 0,05 mm	2,9 mm ± 0,05 mm
General data			
Installation	Indoor	Indoor	Indoor
Length	1 m	3 m	5 m
Bending radius	≥ 30 mm	≥ 30 mm	≥ 30 mm
Connectors			
FC/PC	2 pcs.	2 pcs.	2 pcs.

Optical cables

OL 95 1010

Optical cable term. 10 m

OL 95 1015

Optical cable term. 15 m

OL 95 1020

Optical cable term. 20 m

characteristics

- Low-Smoke-Zero-Halogen-compliant (LSZH)
- Galvanic isolation
- No interferneces by electo-magnetic fields
- Integrated protection against tensile stengths and rodents

Technical Data			
Buffered fiber			
Fiber type	G657A	G657A	G657A
Outer diameter	0,9 mm	0,9 mm	0,9 mm
Material	PVC	PVC	PVC
Typical attenuation	<0,25 dB/km @ 1550 nm; <0,4 dB/km @ 1310 nm	<0,25 dB/km @ 1550 nm; <0,4 dB/km @ 1310 nm	<0,25 dB/km @ 1550 nm; <0,4 dB/km @ 1310 nm
SS tube			
Material	SUS304	SUS304	SUS304
Outer diameter	1,65 mm ± 0,05 mm	1,65 mm ± 0,05 mm	1,65 mm ± 0,05 mm
Width	0,85 mm ± 0,05 mm	0,85 mm ± 0,05 mm	0,85 mm ± 0,05 mm
Thickness	0,25 mm ± 0,02 mm	0,25 mm ± 0,02 mm	0,25 mm ± 0,02 mm
Clearance	0,25 mm ± 0,02 mm	0,25 mm ± 0,02 mm	0,25 mm ± 0,02 mm
Aramid yarn			
Type	1000dtex	1000dtex	1000dtex
Sheath			
Material	LSZH-Compound	LSZH-Compound	LSZH-Compound
Outer diameter	2,9 mm ± 0,05 mm	2,9 mm ± 0,05 mm	2,9 mm ± 0,05 mm
General data			
Installation	Indoor	Indoor	Indoor
Length	10 m	15 m	20 m
Bending radius	≥ 30 mm	≥ 30 mm	≥ 30 mm
Connectors			
FC/PC	2 pcs.	2 pcs.	2 pcs.

Optical cables

OL 95 1030

Optical cable term. 30 m

OL 95 1040

Optical cable term. 40 m

OL 95 1050

Optical cable term. 50 m

characteristics

- Low-Smoke-Zero-Halogen-compliant (LSZH)
- Galvanic isolation
- No interferneces by electo-magnetic fields
- Integrated protection against tensile stengths and rodents

Technical Data			
Buffered fiber			
Fiber type	G657A	G657A	G657A
Outer diameter	0,9 mm	0,9 mm	0,9 mm
Material	PVC	PVC	PVC
Typical attenuation	<0,25 dB/km @ 1550 nm; <0,4 dB/km @ 1310 nm	<0,25 dB/km @ 1550 nm; <0,4 dB/km @ 1310 nm	<0,25 dB/km @ 1550 nm; <0,4 dB/km @ 1310 nm
SS tube			
Material	SUS304	SUS304	SUS304
Outer diameter	1,65 mm ± 0,05 mm	1,65 mm ± 0,05 mm	1,65 mm ± 0,05 mm
Width	0,85 mm ± 0,05 mm	0,85 mm ± 0,05 mm	0,85 mm ± 0,05 mm
Thickness	0,25 mm ± 0,02 mm	0,25 mm ± 0,02 mm	0,25 mm ± 0,02 mm
Clearance	0,25 mm ± 0,02 mm	0,25 mm ± 0,02 mm	0,25 mm ± 0,02 mm
Aramid yarn			
Type	1000dtex	1000dtex	1000dtex
Sheath			
Material	LSZH-Compound	LSZH-Compound	LSZH-Compound
Outer diameter	2,9 mm ± 0,05 mm	2,9 mm ± 0,05 mm	2,9 mm ± 0,05 mm
General data			
Installation	Indoor	Indoor	Indoor
Length	30 m	40 m	50 m
Bending radius	≥ 30 mm	≥ 30 mm	≥ 30 mm
Connectors			
FC/PC	2 pcs.	2 pcs.	2 pcs.

Optical cables

characteristics

- Low-Smoke-Zero-Halogen-compliant (LSZH)
- Galvanic isolation
- No interferneces by electo-magnetic fields
- Integrated protection against tensile stengths and rodents

OL 95 1075

Optical cable term.
75 m

OL 95 1100

Optical cable term.
100 m

OL 95 1150

Optical cable term.
150 m

OL 95 1200

Optical cable term.
200 m

Technical Data				
Buffered fiber				
Fiber type	G657A	G657A	G657A	G657A
Outer diameter	0,9 mm	0,9 mm	0,9 mm	0,9 mm
Material	PVC	PVC	PVC	PVC
Typical attenuation	<0,25 dB/km @ 1550 nm; <0,4 dB/km @ 1310 nm	<0,25 dB/km @ 1550 nm; <0,4 dB/km @ 1310 nm	<0,25 dB/km @ 1550 nm; <0,4 dB/km @ 1310 nm	<0,25 dB/km @ 1550 nm; <0,4 dB/km @ 1310 nm
SS tube				
Material	SUS304	SUS304	SUS304	SUS304
Outer diameter	1,65 mm ± 0,05 mm	1,65 mm ± 0,05 mm	1,65 mm ± 0,05 mm	1,65 mm ± 0,05 mm
Width	0,85 mm ± 0,05 mm	0,85 mm ± 0,05 mm	0,85 mm ± 0,05 mm	0,85 mm ± 0,05 mm
Thickness	0,25 mm ± 0,02 mm	0,25 mm ± 0,02 mm	0,25 mm ± 0,02 mm	0,25 mm ± 0,02 mm
Clearance	0,25 mm ± 0,02 mm	0,25 mm ± 0,02 mm	0,25 mm ± 0,02 mm	0,25 mm ± 0,02 mm
Aramid yarn				
Type	1000dtex	1000dtex	1000dtex	1000dtex
Sheath				
Material	LSZH-Compound	LSZH-Compound	LSZH-Compound	LSZH-Compound
Outer diameter	2,9 mm ± 0,05 mm	2,9 mm ± 0,05 mm	2,9 mm ± 0,05 mm	2,9 mm ± 0,05 mm
General data				
Installation	Indoor	Indoor	Indoor	Indoor
Length	75 m	100 m	150 m	200 m
Bending radius	≥ 30 mm	≥ 30 mm	≥ 30 mm	≥ 30 mm
Connectors				
FC/PC	2 pcs.	2 pcs.	2 pcs.	2 pcs.

Optical cables

OL 95 2030

Optical twin cable term. 30 m

OL 95 2040

Optical twin cable term. 40 m

characteristics

- Special resistant PE-jacket
- UV-resistant
- Galvanic isolation
- No interferneces by electo-magnetic fields
- Special gel protect the fibers from damaged caused by water

Technical Data		
Buffered fiber		
Fiber type	G657A	G657A
Outer diameter	0,9 mm	0,9 mm
Material	LSZH-Compound	LSZH-Compound
Typical attenuation	<0,25 dB/km @ 1550 nm; <0,4 dB/km @ 1310 nm	<0,25 dB/km @ 1550 nm; <0,4 dB/km @ 1310 nm
SS tube		
Material	SUS304	SUS304
Outer diameter	1,65 mm ± 0,05 mm	1,65 mm ± 0,05 mm
Width	0,85 mm ± 0,05 mm	0,85 mm ± 0,05 mm
Thickness	0,25 mm ± 0,02 mm	0,25 mm ± 0,02 mm
Clearance	0,25 mm ± 0,02 mm	0,25 mm ± 0,02 mm
Aramid yarn		
Type	1000dtex	1000dtex
Sheath		
Material	PE-HD	Outdoor
Outer diameter	5,9 mm (±0,05 mm)	40 m
General data		≥ 30 mm
Installation	Outdoor	45 kg/km
Length	30 m	
Bending radius	≥ 30 mm	4 pcs.
Cable weight	45 kg/km	
Connectors		
FC/PC	4 pcs.	

Optical cables

OL 95 2050

optical twin cable term. 50 m

OL 95 2075

Optical twin cable term. 75 m

OL 95 2100

Optical twin cable term. 100 m

characteristics

- Special resistant PE-jacket
- UV-resistant
- Galvanic isolation
- No interferneces by electo-magnetic fields
- Special gel protect the fibers from damaged caused by water

Technical Data			
Buffered fiber			
Fiber type	G657A	G657A	G657A
Outer diameter	0,9 mm	0,9 mm	0,9 mm
Material	LSZH-Compound	LSZH-Compound	LSZH-Compound
Typical attenuation	<0,25 dB/km @ 1550 nm; <0,4 dB/km @ 1310 nm	<0,25 dB/km @ 1550 nm; <0,4 dB/km @ 1310 nm	<0,25 dB/km @ 1550 nm; <0,4 dB/km @ 1310 nm
SS tube			
Material	SUS304	SUS304	SUS304
Outer diameter	1,65 mm ± 0,05 mm	1,65 mm ± 0,05 mm	1,65 mm ± 0,05 mm
Width	0,85 mm ± 0,05 mm	0,85 mm ± 0,05 mm	0,85 mm ± 0,05 mm
Thickness	0,25 mm ± 0,02 mm	0,25 mm ± 0,02 mm	0,25 mm ± 0,02 mm
Clearance	0,25 mm ± 0,02 mm	0,25 mm ± 0,02 mm	0,25 mm ± 0,02 mm
Aramid yarn			
Type	1000dtex	1000dtex	1000dtex
General data			
Installation	Outdoor	Outdoor	Outdoor
Length	50 m	75 m	100 m
Bending radius	≥ 30 mm	≥ 30 mm	≥ 30 mm
Cable weight	45 kg/km	45 kg/km	45 kg/km
Connectors			
FC/PC	4 pcs.	4 pcs.	4 pcs.

HIPEL

Optical cables

characteristics

- Special resistant PE-jacket
- UV-resistant
- Galvanic isolation
- No interferneces by electo-magnetic fields
- Special gel protect the fibers from damaged caused by water

OL 95 2150	OL 95 2200	OL 95 4300
Optical twin cable term. 150 m	Optical twin cable term. 200 m	Optical quad cable term. 300 m

Technical Data			
Buffered fiber			
Fiber type	G657A	G657A	G657A
Outer diameter	0,9 mm	0,9 mm	0,9 mm
Material	LSZH-Compound	LSZH-Compound	LSZH-Compound
Typical attenuation	<0,25 dB/km @ 1550 nm; <0,4 dB/km @ 1310 nm	<0,25 dB/km @ 1550 nm; <0,4 dB/km @ 1310 nm	<0,25 dB/km @ 1550 nm; <0,4 dB/km @ 1310 nm
SS tube			
Material	SUS304	SUS304	SUS304
Outer diameter	1,65 mm ± 0,05 mm	1,65 mm ± 0,05 mm	1,65 mm ± 0,05 mm
Width	0,85 mm ± 0,05 mm	0,85 mm ± 0,05 mm	0,85 mm ± 0,05 mm
Thickness	0,25 mm ± 0,02 mm	0,25 mm ± 0,02 mm	0,25 mm ± 0,02 mm
Clearance	0,25 mm ± 0,02 mm	0,25 mm ± 0,02 mm	0,25 mm ± 0,02 mm
Aramid yarn			
Type	1000dtex	1000dtex	1000dtex
General data			
Installation	Outdoor	Outdoor	Outdoor
Length	150 m	200 m	300 m
Bending radius	≥ 30 mm	≥ 30 mm	≥ 30 mm
Cable weight	45 kg/km	45 kg/km	45 kg/km
Connectors			
FC/PC	4 pcs.	4 pcs.	8 pcs.

Optical multiswitch

OL 41 0008

Fiber Switch + PSU, 8 outputs

Technical Data	
Technical specifications	
Frequency range	950...2150 MHz
Impedance	75 Ω
Return loss	10 dB
Output level	80 dBµV Depending on the signal level of the satellites
Signal to noise ratio @ max. amplification	5 dB
SAT decoupling	35 dB
DVB-T, DAB & FM (electric)	
Frequency range DVB-T	470...790 MHz
Frequency range DAB	174...240 MHz
Frequency range FM	88...108 MHz
Impedance	75 Ω
Return loss	10 dB
Output level for DVB-T	70 dBµV For 6 multiplexes
Signal to noise ratio @ max. amplification	5 dB
Terrestrial decoupling	30 dB
DVB-T, DAB, FM & SAT (Optic)	
Wavelength	1100...1650 nm
Input level	-14...-3 dBm
DC specifications	
Input voltage	11...20 V DC
DiSEqC	1.0
Connectors	
Input	FC/PC connector
Outputs	F-female
Power supply	2,1 mm connector
Operating temperature range	-20...+50 °C

Packaging Data	
Sales unit	1 pcs.
Dimensions (WxHxD) sales unit	305 x 205 x 75 mm
Packaging volume sales unit	dm^3
Gross weight sales unit	1.7 kg
Shipping unit	1 pcs.
Dimensions (WxHxD) shipping unit	305 x 205 x 75 mm
Packaging volume shipping package	

Basic-multiswitch with an optical input, for 8 subscribers. Conversion of one satellite. Power supply in delivery included.

characteristics

- Multiswitch with optical input
- Upgradeable to 2, 3 or 4 satellite + TV / Radio
- All units operate with only one power supply
- Space-saving design
- 8 subscriber outputs

Optical multiswitch

OL 41 0016

Fiber Switch + PSU, 16 outputs

Technical Data	
Technical specifications	
Frequency range	950...2150 MHz
Impedance	75 Ω
Return loss	10 dB
Output level	80 dBµV Depending on the signal level of the satellites
Signal to noise ratio @ max. amplification	5 dB
SAT decoupling	35 dB
DVB-T, DAB & FM (electric)	
Frequency range DVB-T	470...790 MHz
Frequency range DAB	174...240 MHz
Frequency range FM	88...108 MHz
Impedance	75 Ω
Return loss	10 dB
Output level for DVB-T	70 dBµV For 6 multiplexes
Signal to noise ratio @ max. amplification	5 dB
Terrestrial decoupling	30 dB
DVB-T, DAB, FM & SAT (Optic)	
Wavelength	1100...1650 nm
Input level	-14...-3 dBm
DC specifications	
Input voltage	11...20 V DC
DiSEqC	1.0
Connectors	
Input	FC/PC connector
Outputs	F-female
Power supply	2,1 mm connector
Operating temperature range	-20...+50 °C

Packaging Data	
Sales unit	1 pcs.
Dimensions (WxHxD) sales unit	305 x 205 x 75 mm
Packaging volume sales unit	dm^3
Gross weight sales unit	1.84 kg
Shipping unit	1 pcs.
Dimensions (WxHxD) shipping unit	305 x 205 x 75 mm
Packaging volume shipping package	

Basic-multiswitch with an optical input, for 16 subscribers. Conversion of one satellite. Power supply in delivery included.

characteristics

- Multi switch with optical input
- Upgradeable to 2, 3 or 4 satellite + TV / Radio
- All units operate with only one power supply
- Space-saving design
- 16 subscriber outputs

Optical multiswitch

OL 42 0008

Fiber Switch + 1 SAT, 8 outputs

Technical Data	
Technical specifications	
Frequency range	950...2150 MHz
Impedance	75 Ω
Return loss	10 dB
Output level	80 dBµV Depending on the signal level of the satellites
Signal to noise ratio @ max. amplification	5 dB
SAT decoupling	35 dB
DVB-T, DAB & FM (electric)	
Frequency range DVB-T	470...790 MHz
Frequency range DAB	174...240 MHz
Frequency range FM	88...108 MHz
Impedance	75 Ω
Return loss	10 dB
Output level for DVB-T	70 dBµV For 6 multiplexes
Signal to noise ratio @ max. amplification	5 dB
Terrestrial decoupling	30 dB
DVB-T, DAB, FM & SAT (Optic)	
Wavelength	1100...1650 nm
Input level	-14...-3 dBm
DC specifications	
Input voltage	11...20 V DC
DiSEqC	1.0
Connectors	
Input	FC/PC connector
Outputs	F-female
Power supply	2,1 mm connector
Operating temperature range	-20...+50 °C

Packaging Data	
Sales unit	1 pcs.
Dimensions (WxHxD) sales unit	260 x 115 x 65 mm
Packaging volume sales unit	dm^3
Gross weight sales unit	1.1 kg
Shipping unit	1 pcs.
Dimensions (WxHxD) shipping unit	260 x 115 x 65 mm
Packaging volume shipping package	

Extension-multiswitch with an optical input, for 8 subscriber. Conversion of one satellite. Power supply by the connected basic switch OL 41 0008.

characteristics

- Multi switch with optical input
- Upgradeable to 2, 3 or 4 satellite + TV / Radio
- All units operate with only one power supply
- Space-saving design

Optical multiswitch

OL 42 0016

Fiber Switch + 1 SAT, 16 outputs

Technical Data	
Technical specifications	
Frequency range	950...2150 MHz
Impedance	75 Ω
Return loss	10 dB
Output level	80 dBµV Depending on the signal level of the satellites
Signal to noise ratio @ max. amplification	5 dB
SAT decoupling	35 dB
DVB-T, DAB & FM (electric)	
Frequency range DVB-T	470...790 MHz
Frequency range DAB	174...240 MHz
Frequency range FM	88...108 MHz
Impedance	75 Ω
Return loss	10 dB
Output level for DVB-T	70 dBµV For 6 multiplexes
Signal to noise ratio @ max. amplification	5 dB
Terrestrial decoupling	30 dB
DVB-T, DAB, FM & SAT (Optic)	
Wavelength	1100...1650 nm
Input level	-14...-3 dBm
DC specifications	
Input voltage	11...20 V DC
DiSEqC	1.0
Connectors	
Input	FC/PC connector
Outputs	F-female
Power supply	2,1 mm connector
Operating temperature range	-20...+50 °C

Packaging Data	
Sales unit	1 pcs.
Dimensions (WxHxD) sales unit	260 x 115 x 65 mm
Packaging volume sales unit	dm^3
Gross weight sales unit	1.1 kg
Shipping unit	1 pcs.
Dimensions (WxHxD) shipping unit	260 x 115 x 65 mm
Packaging volume shipping package	

Extension-multiswitch with an optical input, for 16 subscriber. Conversion of one satellite. Power supply by the connected basic switch OL 41 0016.

characteristics

- Multi switch with optical input
- Upgradeable to 2, 3 or 4 satellite + TV / Radio
- All units operate with only one power supply
- Space-saving design

Optical mounting accessoires

OL 51 0000

Optical test transmitter

Technical Data	
Output	
Wavelength	1310/1550 nm
Output power	typ. -7 dBm
Modulation	CW / 270 Hz, 1 KHz, 2 KHz
Fibre Type	singlemode, multimode
Connector	FC/PC, SC/PC
Supply voltage	3x 1,5 V AA, 9 V power supply
Battery life time	45 h
Operating temperature range	-10...+60 °C
Dimensions (width x height x depth)	190 x 100 x 50 mm
Weight	0,37 kg

Packaging Data	
Sales unit	1 pcs.
Dimensions (WxHxD) sales unit	240 x 160 x 80 mm
Packaging volume sales unit	dm^3
Gross weight sales unit	0.62 kg
Shipping unit	1 pcs.
Dimensions (WxHxD) shipping unit	240 x 160 x 80 mm
Packaging volume shipping package	

characteristics

- Automatic switch-off functionality
- Illuminated LCD for handling in dark environments
- Easy control by three buttons
- Delivery with power supply and carry bag

Test transmitter for measurements in the optical distribution network. Perfect for testing the passive components before the installation.

OL 55 0000

Optical measurement device

Technical Data	
Input	
Wavelength	800...1700 nm
Measurement range	-50...+30 dBm
Fibre Type	singlemode, multimode
Connector	FC/PC, SC/PC
Supply voltage	3x 1,5 V AA, 9 V power supply
Battery life time	140 h
Operating temperature range	-10...+60 °C
Dimensions (width x height x depth)	190 x 100 x 50 mm
Weight	0,37 kg

Packaging Data	
Sales unit	1 pcs.
Dimensions (WxHxD) sales unit	240 x 160 x 80 mm
Packaging volume sales unit	dm^3
Gross weight sales unit	0.64 kg
Shipping unit	1 pcs.
Dimensions (WxHxD) shipping unit	240 x 160 x 80 mm
Packaging volume shipping package	

characteristics

- Automatic switch-off functionality
- Illuminated LCD for handling in dark environments
- Convenient use by the compact design
- For reference measurements zero-calibration possible
- Delivery with power supply and carry bag

Optical measurement device for testing the optical power. Perfect for system documentation or troubleshooting. As signal source will be used the optical test transmitter OL 51 0000 or the optical LNB (OL 11 000 / OL 12 0000 and OL 16 1310 Transmitter Kit).

Optical mounting accessoires

OL 57 0002

Cleaning cassette

characteristics

- Cleaning connector surface of optical cables
- Cleaning section relockable
- 500 cleaning cycles
- Cleaning tape exchangeable

OL 57 0003

Replacement tape for OL 57 0002

characteristics

- Cleaning reel - refill pack for OL 57 002
- 500 cleaning cycles
- Easy cassette change

OL 57 0001

Cleaning pen for FC and PC connectors

characteristics

- Cleaning connector surface of optical cables and sockets
- 2,5 mm diameter, suitable for FC and SC connectors
- 800 cleaning cycles

OL 82 0002

N-interconnection cable 2 m

OL 82 0003

N-interconnection cable 3 m

OL 82 0005

N-interconnection cable 5 m

OL 82 0010

N-interconnection cable 10 m

characteristics

- 50 Ohm coaxial cable
- Weather-resistant design
- N connection on both sides

Technical Data				
Connector	N	N	N	N
Length	2 m	3 m	5 m	10 m
Impedance	50 Ω	50 Ω	50 Ω	50 Ω
Diameter	10 mm	10 mm	10 mm	10 mm

HEREDIA ANTENA

Optical mounting accessoires

OL 93 0001

FC/PC coupling

OL 93 0002

FC to SC adapter

characteristics

- Typical insertion loss: < 0,3 dB
- Reliable connection of two optical fiber cables of the OL series
- FC/PC connection on both sides

Technical Data		
Connector	FC/PC	FC/PC to SC/PC

OL 94 0005

Optical attenuator 5 dB

OL 94 0010

Optical attenuator 10 dB

OL 94 0015

Optical attenuator 15 dB

characteristics

- Optical attenuator for OL retrans-formers
- 5 dB Attenuation
- Simple installation without additi-onal adapter

Technical Data			
Loss	5 dB	10 dB	15 dB
Connector	FC/PC	FC/PC	FC/PC

HDE ANTENNA

Optical mounting accessoires

OLPS 0230

Power supply 20V/1.2A

Technical Data	
Operating voltage	230 V AC (50/60 Hz)
Output voltage	20 V DC
Output current	1,2 A (Short circuit proof)

Packaging Data	
Sales unit	1 pcs.
Dimensions (WxHxD) sales unit	160 x 125 x 50 mm
Packaging volume sales unit	dm^3
Gross weight sales unit	0.21 kg
Shipping unit	1 pcs.
Dimensions (WxHxD) shipping unit	160 x 125 x 50 mm
Packaging volume shipping package	

characteristics

- Operating voltage 230 V AC
- Output voltage 20 V DC
- Output current 1,2 A

Optional power supply for optical converter OL 21 xxxx and OL 22 xxxx.

OL 95 0001

Optical connection cable, FC/PC pigtail, 1 m

Technical Data	
Buffered fiber	
Fiber type	G657A2
Outer diameter	0,9 mm
Material	LSZH-Compound
Typical attenuation	<0,25 dB/km @ 1550 nm; <0,4 dB/km @ 1310 nm
General data	
Installation	Indoor
Length	1 m
Bending radius	≥ 30 mm
Connectors	
FC/PC	1 pcs.

Packaging Data	
Sales unit	1 m
Dimensions (WxHxD) sales unit	200 x 170 x 5 mm
Packaging volume sales unit	dm^3
Gross weight sales unit	0.02 kg
Shipping unit	1 m
Dimensions (WxHxD) shipping unit	mm
Packaging volume shipping package	

characteristics

- Low-Smoke-Zero-Halogen-compliant (LSZH)
- Galvanic isolation
- No interferneces by electo-magnetic fields
- One-way FC/PC connector

Fiber optic connection cable for installation on an incoming fiber optic cable without connector. 1 fiber, FC/PC connector on one side, length 1 m.

HIPER SAT

Channel processing Micro Headend

WISI Micro Headend:

Big performance in tiny spaces.

High functionality in smallest design

The versatile WISI Micro-Headends OM 10 (DVB-S/S2 > DVB-C/T) and OM 11 (DVB-C/T/T2 > DVB-C/T) set new standards for ultra-compact headends. These meet the high demands of hotels, hospitals, retirement homes and other gated communities in terms of user-friendliness, cost-effectiveness and flexibility.

At a glance

- Transmodulator of 6 DVB-S/S2 or DVB-T/T2/C channels into 8x DVB-C or DVB-T channels
- Built-in antenna distribution matrix
- 4 CI slots for central decryption
- PID Remapping enables static service ID assignment at the outbound channel
- LCN/NIT Processing
- Multiplex functionality at the input and at the output
- Video content player via USB or LAN
- Programming via web interface
- Bluetooth access for Smartphone and Tablet

DVB-T/DVB-C Channel Processing

OM 10 0426

Transmodulator 4x DVB-S/S2/S2X – 6x COFDM + 2 CI

Technical Data	
Input	
Number of tuner	4 pcs.
Modulation type	DVB-S/S2/S2X
Impedance	75 Ω
Input frequency range	9502150 MHz
Input frequency steps	1 MHz
Input level range	5090 dBµV
Symbol rate	153 MS/s
DiSEqC	DiSEqC 1.0
Compliance	DVB-S (EN 300 421), DVB-S2 (EN 302 307-1), DVB-S2X (EN 302 307-2)
CI Processing	
Number of PCMCIA slots	2
TS Processing	
TS stuffing	Yes
SI-Table handling	Yes
NIT handling	Yes
PID remapping	Yes
COFDM Processing	
Constellations	QPSK, 16-, 64-QAM
FEC	1/2,2/3,3/4,5/6,7/8
Guard Interval	1/2,2/3,3/4,5/6,7/8
FFT Mode	2k, 8k
MER	>40 dB
Output	
Impedance	75 Ω
Output frequency range	110862 MHz
Output frequency steps	1 MHz
Output level	85...100 dBµV
Number of Channels	6 pcs.
Channel allocation	adjacent (1 x 6)

Packaging Data	
Sales unit	1 pcs.
Dimensions (WxHxD) sales unit	340 x 285 x 175 mm
Packaging volume sales unit	dm³
Gross weight sales unit	kg
Shipping unit	1 pcs.
Dimensions (WxHxD) shipping unit	mm
Packaging volume shipping package	

The OM 10 0426 is a micro headend which can transmodulate 4DVB-S/S2/S2X transponders into 6 DVB-T (COFDM) packages. Asit comes with 2 CI slots, it is perfectly suited for the centraldecryption of pay-tv services. There is also the possibility tocreate a multiplex before the CI slots allowing the user tocombine services from different transponders but to decryptthem by only one smartcard, hereby guaranteeing the efficientusage of professional CAMs. Additionally the OM 10 supportsthe deletion of unwanted services from a transponder andenables the reduction of output channels by using the outputmultiplex functionality. As a transport stream, external videocontent can be fed in via USB or the LAN connection.

characteristics

- Transmodulator of 4 DVB-S/S2/S2X transpondersto 6 DVB-T channels
- The integrated 4 in switch matrix reduces theinstallation effort and DiSEqC 1.0 is increasing theflexibility by controlling up to 4 satellites
- 2 CI slots for central decryption
- PID remapping allows setting of static service IDs at the output. It is no longer necessary for the TV set to make a scan if there is any transponder modification at the input
- LCN / NIT processing
- Multiplex functionality at the input and output
- USB - interface to feed in any video content
- Programming via web interface
- Integrated DHCP server enables an automatic connection to a PC
- Smartphone and tablet access via Bluetooth

DVB-T/DVB-C Channel Processing

OM 10 0646

Transmodulator 6x DVB-S/S2 – 6x COFDM + 4 CI

Technical Data	
Input	
Number of tuner	6 pcs.
Modulation type	DVB-S/S2
Impedance	75 Ω
Input frequency range	950...2150 MHz
Input frequency steps	1 MHz
Input level range	50...90 dBµV
Symbol rate	1...53 MS/s MS/s
DiSEqC	DiSEqC 1.0
Compliance	DVB-S (EN 300 421), DVB-S2 (EN 302 307-1)
CI Processing	
Number of PCMCIA slots	4
TS Processing	
TS stuffing	Yes
SI-Table handling	Yes
NIT handling	Yes
PID remapping	Yes
COFDM Processing	
Constellations	QPSK, 16-, 64-QAM
FEC	1/2,2/3,3/4,5/6,7/8
Guard Interval	1/8, 1/16, 1/32
FFT Mode	2k, 8k
MER	>40 dB
Output	
Impedance	75 Ω
Output frequency range	110...862 MHz
Output frequency steps	1 MHz
Output level	85...100 dBµV
Number of Channels	6 pcs.
Channel allocation	adjacent (1 x 6)

Packaging Data	
Sales unit	1 pcs.
Dimensions (WxHxD) sales unit	340 x 285 x 175 mm
Packaging volume sales unit	dm^3
Gross weight sales unit	2.59 kg
Shipping unit	1 pcs.
Dimensions (WxHxD) shipping unit	mm
Packaging volume shipping package	

The OM 10 0646 is a micro headend which can transmodulate 6 DVB-S/S2 transponders into 6 DVB-T (COFDM) packages. As it comes with 4 CI slots, it is perfectly suited for the central decryption of pay-tv services. There is also the possibility to create a multiplex before the CI slots allowing the user to combine services from different transponders but to decrypt them by only one smartcard, hereby guaranteeing the efficient usage of professional CAMs. Additionally the OM 10 supports the deletion of unwanted services from a transponder and enables the reduction of output channels by using the output multiplex functionality. As a transport stream, external video content can be fed in via USB or the LAN connection.

characteristics

- Transmodulator of 6 DVB-S/S2 transponders to 6 DVB-T packages
- The integrated 4 in 6 switch matrix reduces the installation effort and DiSEqC 1.0 is increasing the flexibility by controlling up to 4 satellites
- 4 CI slots for central decryption
- PID remapping allows setting of static service IDs at the output. It is no longer necessary for the TV set to make a scan if there is any transponder modification at the input
- LCN / NIT processing
- Multiplex functionality at the input and output
- USB - interface to feed in any video content
- Programming via web interface
- Integrated DHCP server enables an automatic connection to a PC
- Smartphone and tablet access via Bluetooth

DVB-T/DVB-C Channel Processing

OM 10 0648

Transmodulator 6x DVB-S/S2/S2X - 8x QAM/COFDM + 4 CI

Technical Data	
Input	
Number of tuner	6 pcs.
Modulation type	DVB-S/S2/S2X
Impedance	75 Ω
Input frequency range	950...2150 MHz
Input frequency steps	1 MHz
Input level range	50...90 dBµV
Symbol rate	1...53 MS/s
DiSEqC	DiSEqC 1.0
Compliance	DVB-S (EN 300 421), DVB-S2 (EN 302 307-1), DVB-S2X (EN 302 307-2)
CI Processing	
Number of PCMCIA slots	4
TS Processing	
TS stuffing	Yes
SI-Table handling	Yes
NIT handling	Yes
PID remapping	Yes
QAM Processing	
Constellations	64-, 256- QAM
Symbol rate	4,45...7,20 Mbaud
MER	>40 dB
COFDM Processing	
Constellations	QPSK, 16-, 64-QAM
FEC	1/2, 2/3, 3/4, 5/6, 7/8
Guard Interval	1/8, 1/16, 1/32
FFT Mode	2k, 8k
MER	>40 dB
Output	
Impedance	75 Ω
Output frequency range	110...862 MHz (COFDM); 50...862 MHz (QAM)
Output frequency steps	1 kHz
Output level	90...105 dBµV
Number of Channels	6 pcs.
Channel allocation	adjacent (2 blocks per 4 channels)

Packaging Data	
Sales unit	1 pcs.
Dimensions (WxHxD) sales unit	345 x 290 x 170 mm
Packaging volume sales unit	dm^3
Gross weight sales unit	2.98 kg
Shipping unit	1 pcs.
Dimensions (WxHxD) shipping unit	mm
Packaging volume shipping package	

The OM 10 0648 is a micro headend which can transmodulate 6 DVB-S/S2/S2X transponders into 8 DVB-C (QAM) or 8 DVB-T (COFDM) channels. As it comes with 4 CI slots, it is perfectly suited for the central decryption of pay-tv services. There is also the possibility to create a multiplex before the CI slots allowing the user to combine services from different transponders but to decrypt them by only one smartcard, hereby guaranteeing the efficient usage of professional CAMs. Additionally the OM 10 supports the deletion of unwanted services from a transponder and enables the reduction of output channels by using the output multiplex functionality. As a transport stream, external video content can be fed in via USB or the LAN connection.

characteristics

- Transmodulator of 6 DVB-S/S2/S2X transponders to 8 DVB-C or DVB-T channels
- The integrated 4 in 6 switch matrix reduces the installation effort and DiSEqC 1.0 is increasing the flexibility by controlling up to 4 satellites
- 4 CI slots for central decryption
- PID remapping allows setting of static service IDs at the output. It is no longer necessary for the TV set to make a scan if there is any transponder modification at the input
- LCN / NIT processing
- Multiplex functionality at the input and output
- USB - interface to feed in any video content
- Programming via web interface
- Integrated DHCP server enables an automatic connection to a PC
- Smartphone and tablet access via Bluetooth

DVB-T/DVB-C Channel Processing

OM 11 0648

Transmodulator 6x DVB-T/T2/C - 8x QAM/COFDM + 4 CI

Technical Data	
Input	
Number of tuner	6 pcs.
Impedance	75 Ω
Input frequency range	42...1002 MHz
Input frequency steps	250 kHz
Input level range	55...95 dBµV
Bandwidth	6, 7, 8 MHz
Modulation DVB-T/T2	COFDM / OFDM (EN 300 744)
Symbol rate DVB-T/T2	according modulation standard
Modulation DVB-C	16-, 64-, 256 QAM (EN 300 429)
Symbol rate DVB-C	1...7,2 Mbaud
FEC DVB-T	RS 204, 1885,8 / Convolution
FEC DVB-T2	LDPC / BCH
FEC DVB-C	RS 204-16
CI Processing	
Number of PCMCIA slots	4
TS Processing	
TS stuffing	Yes
SI-Table handling	Yes
NIT handling	Yes
PID remapping	Yes
QAM Processing	
Constellations	64-, 256- QAM
Symbol rate	4,45...7,20 MSymb/s
MER	>40 dB
COFDM Processing	
Constellations	QPSK, 16-, 64-QAM
FEC	1/2, 2/3, 3/4, 5/6, 7/8
Guard Interval	1/8, 1/16, 1/32
FFT Mode	2k, 8k
MER	>40 dB
Output	
Impedance	75 Ω
Output frequency range	110...862 MHz (COFDM); 50...862 MHz (QAM)
Output frequency steps	1 MHz

Technical Data	
Output level	90...105 dBµV
Number of Channels	8 pcs.
Channel allocation	adjacent (2 blocks per 4 channels)

Packaging Data	
Sales unit	1 pcs.
Dimensions (WxHxD) sales unit	345 x 290 x 170 mm
Packaging volume sales unit	dm^3
Gross weight sales unit	3 kg
Shipping unit	1 pcs.
Dimensions (WxHxD) shipping unit	mm
Packaging volume shipping package	

The OM 11 0648 is a micro headend which can transmodulate 6 DVB-T/T2/C channels into 8 DVB-C (QAM) or 8 DVB-T (COFDM) channels. As it comes with 4 CI slots, it is perfectly suited for the central decryption of pay-tv services. There is also the possibility to create a multiplex before the CI slots allowing the user to combine services from different channels but to decrypt them by only one smartcard, hereby guaranteeing the efficient usage of professional CAMs. Additionally the OM 11 supports the deletion of unwanted services from a channel and enables the reduction of output channels by using the output multiplex functionality. As a transport stream, external video content can be fed in via USB or the LAN connection.

characteristics

- Transmodulator of 6 DVB-T/T2/C channels to 8 DVB-C or DVB-T channels
- Integrated switch matrix reduces installation effort. Parallel insertion of DVB-T/T2 and DVB-C possible (Input 1 -> Tuner 1...2 / Input 2 -> Tuner 1...6 / Input 3 -> Tuner 3....6)
- 4 CI slots for central decryption
- PID remapping allows setting of static service PIDs at the output. It is no longer necessary for the TV set to make a scan if there is any transponder modification at the input
- LCN / NIT processing
- Multiplex functionality at the input and output
- USB-interface to feed in any video content
- Programming via web interface
- Integrated DHCP server enables an automatic connection to a PC
- Smartphone and tablet access via Bluetooth

DVB-T/DVB-C Channel Processing

OM 20 064S

IP-Streamer 6x DVB-S/S2/S2X - 128x SPTS, 4x CI

Technical Data	
Input	
Number of tuner	6 pcs.
Modulation type	DVB-S/S2/S2X
Impedance	75 Ω
Input frequency range	950...2150 MHz
Input frequency steps	1 MHz
Input level range	50...90 dBµV
Symbol rate	1...53 MS/s
DiSEqC	DiSEqC 1.0
Compliance	DVB-S (EN 300 421), DVB-S2 (EN 302 307-1), DVB-S2X (EN 302 307-2)
CI Processing	
Number of PCMCIA slots	4
TS Processing	
TS stuffing	Yes
Advanced PSI/SI regeneration	Yes
NIT handling	Yes
PID filtering and remapping	Yes
PCR correction and de-jitter	Yes
Compliance	ETSI EN 300 468
Streaming output	
IP-Outputs	Up to 128x SPTS
IP-Compliance	ISO/IEC 13818
IP-Output protocol	UDP/RTP/Unicast and Multicast
IP-TS-Output format	SPTS VBR1
IP-Packet format	MPEG over UDP/IP and RTP/IP
IP-Packet size	188 Byte
SAP (Session Announcement Protocol)	Yes
Data rate	1Gbps (netto 560 Mbps)
IGMP Querier	No
SNMP	No

Packaging Data	
Sales unit	1 pcs.
Dimensions (WxHxD) sales unit	340 x 285 x 175 mm
Packaging volume sales unit	dm^3
Gross weight sales unit	2.6 kg
Shipping unit	1 pcs.
Dimensions (WxHxD) shipping unit	mm
Packaging volume shipping package	

The OM 20 064S is a micro headend which generates up to 128 SPTS services from 6 DVB-S/S2/S2X transponders. The SPTS services can be fed directly into an IP network and received by IPTV-capable devices. A M3U table allows the easy handling of a service list. The OM 20 064S is perfectly suited for the IPTV provisioning e.g. in hotels or hall of residences and supports by the integrated 4 CI slots the central decryption of pay-tv content. There is also the possibility to create a multiplex before the CI slots allowing the user to combine services from different transponders but to decrypt them by only one smartcard, hereby guaranteeing the efficient usage of professional CAMs. As a transport stream, external video content can be fed in via USB or the LAN connection.

characteristics

- IP-Streamer of 128 SPTS services from 6 DVB-S/S2/S2X transponders
- The integrated 4 in 6 switch matrix reduces the installation effort and DiSEqC 1.0 is increasing the flexibility by controlling up to 4 satellites
- 4 CI slots for central decryption
- Freely selectable IP addresses at the output
- Automatical generation of M3U tables
- USB - interface to feed in any video content
- Programming via web interface
- Integrated DHCP server enables an automatic connection to a PC
- Smartphone and tablet access via Bluetooth

Channel processing Compact Headend

WISI Compact Headend:
Compact, modular and extremely flexible.

Thermo-optimized housing

HF output to house distribution system

Test socket **-20 dB**

Additional **FM input**

Slots for up to **14 twin modules**

Port for handset OH 41, for programming on site

Ethernet interface for remote monitoring via a web browser

USB interface for programming and software updates

Wall mounting of the WISI Compact Headends OH.

Powerful in technology, compact in footprint, modular and flexibly expandable, the new **WISI Compact Headend System OH** combines all the advantages of a future-proof and economical headend.

WISI Compact Headend OH holds up to 14 modules and thus offers an optimal and space-saving channel processing for up to 28 digital or analogue channels in a 3HE 19" housing.

WISI Compact Headend OH is equipped with a high performance power supply. The modules have a low power consumption to keep operating costs low. The USB connection and the RJ45 socket can be used to update the software of the basic unit and individual modules as well as to save their configuration. All functions can also be set up remotely via a web browser.

Base units

OH 40 A

Compact Headend basic unit, 230 V AC, 3 HE, for 7 modules

Technical Data	
Frequency range TV	47...862 MHz (output combiner/ amplifier)
Frequency range FM	87,5...108 MHz (FM-amplifier)
Input level FM	70...100 dBµV
Gain FM	25 dB
Attenuator FM	0...30 dB (1 dB-steps)
Output level	110 dBµV
Output attenuator	0...15 dB
Output test point	-20 dB
Connectors	
Module slots	7 pcs. (OH-module)
F-female	3 pcs. (FM-input, output, output measurement socket)
USB	1 pcs. (Software-Update, Konfigu-ration)
RJ11	1 pcs. (OH 41)
RJ45	1 pcs. (remote monitoring and programming)
General data	
Operating voltage AC	180...265 V
Power consumption	<185 W
LNB supply voltage	12,5 V
LNB electrical power supply	1,2 A
Dimensions (width x height x depth)	276 x 159 x 385 mm
Operating temperature range	-20...+50 °C

Packaging Data	
Sales unit	1 pcs.
Dimensions (WxHxD) sales unit	445 x 305 x 190 mm
Packaging volume sales unit	dm^3
Gross weight sales unit	5.45 kg
Shipping unit	pcs.
Dimensions (WxHxD) shipping unit	mm
Packaging volume shipping package	23.5

Powerful technology, compact dimensions, modular and flexibly expandable; the WISI COMPACT HEADEND System OH combines all the advantages of an innovative and affordable headend. WISI Compact Headend OH is easy to configure. With up to 7 module slots it offers channel processing for 7 analogue or 28 digital channels in one chassis. WISI Compact Headend OH operates on a high efficiency power supply, with low consumption modules in order to make a minimum ecological impact and a low operational cost. The USB connection and the RJ45 interface can be used to execute software updates for the basic unit as well as for the modules. Furthermore, all functions can be furnished from a distance per web browser.

characteristics

- Base unit for analogue and digital channel processing
- Slots for up to 7 modules (7 analog bzw. 28 digital channels)
- Wall mounting
- Integrated FM amplifier
- Programable with OH 41 hand-set
- Update via USB-connection (USB memory stick)
- Integrated remote supervision moduel OH 51 A (license optional)
- High output power

Base units

OH 50 A

Compact Headend basic unit, 230 V AC, 19“, 3 HE, for 14 modules

Technical Data	
Frequency range TV	47...862 MHz (output combiner/ amplifier)
Frequency range FM	87,5...108 MHz (FM-amplifier)
Input level FM	70...100 dBµV
Gain FM	25 dB
Attenuator FM	30 dB (1 dB-steps)
Output level	110 dBµV
Output attenuator	0...15 dB
Output test point	-20 dB
Connectors	
Module slots	14 pcs. (OH-module)
F-female	3 pcs. (FM-input, output, output measurement socket)
USB	1 pcs. (Software-Update, Konfiguration)
RJ11	1 pcs. (OH 41)
RJ45	1 pcs. (remote monitoring and programming)
General data	
Operating voltage AC	180...265 V (47...63 Hz)
Power consumption	<185 W
LNB supply voltage	12,5 V
LNB electrical power supply	1,2 A
Dimensions (width x height x depth)	443 x 132 x 351 mm (3 HE)
Operating temperature range	-20...+50 °C

Packaging Data	
Sales unit	1 pcs.
Dimensions (WxHxD) sales unit	475 x 475 x 140 mm
Packaging volume sales unit	dm^3
Gross weight sales unit	7.5 kg
Shipping unit	pcs.
Dimensions (WxHxD) shipping unit	mm
Packaging volume shipping package	31.5

Powerful technology, compact dimensions, modular and flexibly expandable; the WISI COMPACT HEADEND System OH combines all the advantages of an innovative and affordable headend. WISI Compact Headend OH is easy to configure. With up to 14 module slots it offers channel processing for 14 analogue or 28 digital channels in a 3 HU 19“ rack chassis. WISI Compact Headend OH operates on a high efficiency power supply, with low consumption modules in order to make a minimum ecological impact and a low operational cost. The USB connection and the RJ45 interface can be used to execute software updates for the basic unit as well as for the modules. Furthermore, all functions can be furnished from a distance per web browser.

characteristics

- Base unit for analogue and digital channel processing
- Slots for up to 14 modules (14 analog or 56 digital channels)
- 19“ rack-mounting or wall mounting
- Integrated FM amplifier
- Simple programming with handset OH 41 (OK 41 A)
- Preprogramming via USB-connection (USB-Stick)
- Integrated remote supervision moduel OH 51 A (license optional)
- High output power

Digital modules

OH 84

Reception of 4 DVB-S/S2 signals and transmodulation into 4 DVB-C channels

Technical Data	
Input	
Input frequency range	950...2150 MHz
Input frequency steps	1 MHz
Return loss IN	>8 dB
Isolation internal multiswitch	>30 dB
Input level range	47...90 dBµV
AFC	±10 MHz
Modulation	QPSK (EN300421), QPSK 8PSK (EN302307)16APSK, 32APSK
Symbol rate	QPSK: 1...53 MS/s; 8PSK: 1...45 MS/s; 16APSK: 1...35 MS/s; 32APSK: 1...28 MS/s
Spectral inversion	normal or inverted
FEC outer DVB-S	RS 204-16
FEC inner DVB-S	1/2, 2/3, 3/5, 5/6, 7/8
FEC outer DVB-S2	BCH
FEC inner DVB-S2	(1/4, 1/3, 2/5, 1/2, 3/5, 2/3, 3/4, 4/5, 5/6, 8/9, 9/10 (QPSK) /5, 2/3, 3/4, 5/6, 8/9, 9/10 (8PSK))
Output	
Output frequency range	45...862 MHz
Output frequency steps	250 kHz
Frequency stability	±30 kHz
Output channel bandwidth (coupelt)	4 x 8 MHz
Output level	88...103 dBµV
Amplitude response (O-E)	1 dB
Modulation type	32-, 64-, 128-, 256-QAM
Symbol rate	4,48...7,20 MS/s
Spurious suppression	>50 dB (at QAM 256)
SNR	≥45 dB
MER	≥40 dB
Bit stuffing	Yes
SI-Table handling	Yes
PID filtering	Yes
LCN	Yes

Packaging Data	
Sales unit	1 pcs.
Dimensions (WxHxD) sales unit	340 x 170 x 70 mm
Packaging volume sales unit	dm^3
Gross weight sales unit	0.587 kg
Shipping unit	pcs.
Dimensions (WxHxD) shipping unit	mm
Packaging volume shipping package	2.681

Powerful technology, compact dimensions, modular and flexibly expandable; the WISI COMPACT HEADEND System OH combines all the advantages of an innovative and affordable headend. WISI Compact Headend OH is easy to configure. With up to 14 module slots it offers channel processing for 14 analogue or 28 digital channels in a 3 HU 19" rack chassis. WISI Compact Headend OH operates on a high efficiency power supply, with low consumption modules in order to make a minimum ecological impact and a low operational cost. The USB connection and the RJ45 interface can be used to execute software updates for the basic unit as well as for the modules. Furthermore, all functions can be furnished from a distance per web browser.

Short description

- Reception of 4 DVB-S/S2 signals and transmodulation into 4 DVB-C channels
- Input frequency range 950...2150 MHz
- Output frequency range 47...862 MHz
- Integrated distribution matrix
- DiSEqC 1.0
- PID filtering
- NIT and LCN generation
- MPEG2 and MPEG4 compatible

Digital modules

OH 85 H

Twin DVB-S/S2 – QAM transmodulator with CI

Technical Data	
Input	
Input frequency range	950...2150 MHz
Input frequency steps	1 MHz
Input level range	47...70 dBµV
AFC	±10 MHz
Modulation	QPSK, 8PSK
Symbol rate	QPSK: 1...53 MS/s; 8PSK: 1...45 MS/s; 16APSK: 1...35 MS/s; 32APSK: 1...28 MS/s
Spectral inversion	normal or inverted
FEC outer DVB-S	RS 204, 188, 16
FEC inner DVB-S	Conv. 1/2, 2/3, 3/4, 5/6, 7/8
FEC outer DVB-S2	BCH
FEC inner DVB-S2	LDPC 1/2, 3/5, 2/3, 3/4, 4/5, 5/6, 8/9, 9/10
Output	
Output frequency range	45...862 MHz
Output frequency steps	500 kHz
Frequency stability	±30 kHz
Output channel bandwidth (coupelt)	2 x 8 MHz
Output level	85...103 dBµV
Amplitude response (O-E)	1 dB
Modulation type	16-, 32-, 64-, 128-, 256- QAM
Symbol rate	3.45...6.9 MS/s
Spurious suppression	>50 dB
SNR	≥45 dB
MER	≥40 dB
Bit stuffing	Yes
PCR correction	Yes
PID filtering	Yes
LCN	Yes
NIT generation	Yes

Packaging Data	
Sales unit	1 pcs.
Dimensions (WxHxD) sales unit	340 x 170 x 70 mm
Packaging volume sales unit	dm^3
Gross weight sales unit	0.587 kg
Shipping unit	pcs.
Dimensions (WxHxD) shipping unit	mm
Packaging volume shipping package	2.681

Powerful technology, compact dimensions, modular and flexibly expandable; the WISI COMPACT HEADEND System OH combines all the advantages of an innovative and affordable headend. WISI Compact Headend OH is easy to configure. With up to 14 module slots it offers channel processing for 14 analogue or 28 digital channels in a 3 HU 19" rack chassis. WISI Compact Headend OH operates on a high efficiency power supply, with low consumption modules in order to make a minimum ecological impact and a low operational cost. The USB connection and the RJ45 interface can be used to execute software updates for the basic unit as well as for the modules. Furthermore, all functions can be furnished from a distance per web browser.

characteristics

- Reception of two DVB-S/S2-signals and transmodulation into two DVB-C channels
- 2x CI slots for central decryption
- Input frequency range 950...2150 MHz
- Output frequency range 47...862 MHz
- MPEG 2 and MPEG 4 compatible
- PID filtering
- NIT and LCN generation

Digital modules

OH 86 2

Twin DVB-C/-T/-T2 - QAM transmodulator with CI

Technical Data	
Input	
Input frequency range	45...878 MHz
Input frequency steps	1 kHz
Channel bandwidth	6/7/8 MHz
channel bandwidth DVB-T2	1,7 / 5 / 6 / 7 / 8 MHz
Input level range	47...90 dBµV
FEC DVB-C	Conv., RS 188, 204
QAM-Modulationsart	QPSK, 16QAM, 64QAM,128QAM, 256QAM
QAM Symbolrate	1...7,2 Mbaud
FEC DVB-T	Conv., K=7, G=1/2, 2/3, 3/4, 4/5, 5/6, 7/8
Modulation schema DVB-T	QPSK, 16-, 64-QAM
Guard Intervall DVB-T	1/4, 1/8, 1/16, 1/32
FFT DVB-T	2k, 8k switchable
FEC DVB-T2	LDPC/BCH-Code 1/2, 2/3, 3/4, 4/5, 5/6, 3/5
Modulation scheme DVB-T2	QPSK, 16QAM, 64QAM, 256QAM
Guard Intervall DVB-T2	1/4, 1/8, 1/16, 1/32, 1/128, 19/128, 19/256
FFT DVB-T2	1k, 2k, 4k, 8k, 16k, 32k
Output	
Output frequency range	45...870 MHz (channel A)
Output frequency steps	1000 kHz
Frequency stability	±30 kHz
Output channel bandwidth (coupelt)	2 x 8 MHz
Output level	85...103 dBµV (Depending on QAM-symbol rate)
Amplitude response (O-E)	±1 dB
Spurious suppression	≥50 dB
S/N	≥45 dB
MER	≥40 dB
Modulation	16-, 32-, 64-, 128-, 256-QAM
Symbol rate	3,45...6,9 MS/s
Spectral inversion	normal or inverted

Packaging Data	
Sales unit	1 pcs.
Dimensions (WxHxD) sales unit	340 x 170 x 70 mm
Packaging volume sales unit	dm^3
Gross weight sales unit	0.49 kg
Shipping unit	pcs.
Dimensions (WxHxD) shipping unit	mm
Packaging volume shipping package	2.681

Powerful technology, compact dimensions, modular and flexibly expandable; the WISI COMPACT HEADEND System OH combines all the advantages of an innovative and affordable headend. WISI Compact Headend OH is easy to configure. With up to 14 module slots it offers channel processing for 14 analogue or 28 digital channels in a 3 HU 19" rack chassis. WISI Compact Headend OH operates on a high efficiency power supply, with low consumption modules in order to make a minimum ecological impact and a low operational cost. The USB connection and the RJ45 interface can be used to execute software updates for the basic unit as well as for the modules. Furthermore, all functions can be furnished from a distance per web browser.

characteristics

- Reception of two DVB-T / T2 / C signals and transmodulation into two QAM-TV channels (coupled)
- 2x CI slots for central decryption
- MPEG 2 and MPEG 4 compatible
- PID filtering
- NIT and LCN generation

Digital modules

OH 88 H

Twin DVB-S/S2 – COFDM transmodulator with CI

Technical Data	
Input	
Input frequency range	950...2150 MHz
Input frequency steps	1 MHz
Input level range	47...70 dBµV
AFC	±10 MHz
Modulation type	QPSK, 8PSK
Symbol rate	QPSK: 1...53 MS/s; 8PSK: 1...45 MS/s; 16APSK: 1...35 MS/s; 32APSK: 1...28 MS/s
FEC outer DVB-S	BCH
FEC inner DVB-S	Conv. 1/2, 2/3, 3/4, 5/6, 7/8
FEC outer DVB-S2	BCH
FEC inner DVB-S2	LDPC 1/2, 3/5, 2/3, 3/4, 4/5, 5/6, 8/9, 9/10
Output	
Output frequency range	47...862 MHz
Output frequency steps	500 kHz
Frequency stability	±30 kHz
Output channel bandwidth (coupelt)	2 x 7/8 MHz
Output level	95...105 dBµV
Amplitude response (O-E)	±1 dB
Spurious suppression	>50 dB
S/N	>41 dB
MER	>37 dB
Modulation	QPSK, 16-, 64-QAM
FEC	1/2, 2/3, 3/4, 5/6, 7/8
Guard Interval	1/4, 1/8, 1/16, 1/32
FFT modus	2 k/8 k
Bit stuffing	Yes
PCR correction	Yes
PID filtering and remapping	Yes
Connectors	
F-female	3 pcs.

Packaging Data	
Sales unit	1 pcs.
Dimensions (WxHxD) sales unit	340 x 170 x 70 mm
Packaging volume sales unit	dm^3
Gross weight sales unit	0.5 kg
Shipping unit	pcs.
Dimensions (WxHxD) shipping unit	mm
Packaging volume shipping package	4.04

Powerful technology, compact dimensions, modular and flexibly expandable; the WISI COMPACT HEADEND System OH combines all the advantages of an innovative and affordable headend. WISI Compact Headend OH is easy to configure. With up to 14 module slots it offers channel processing for 14 analogue or 28 digital channels in a 3 HU 19" rack chassis. WISI Compact Headend OH operates on a high efficiency power supply, with low consumption modules in order to make a minimum ecological impact and a low operational cost. The USB connection and the RJ45 interface can be used to execute software updates for the basic unit as well as for the modules. Furthermore, all functions can be furnished from a distance per web browser.

characteristics

- Reception of two DVB-S/S2 signals and transmodulation into two COFDM-TV channels
- 2x CI slots for central decryption
- MPEG 2 and MPEG 4 compatible
- PID filtering
- NIT and LCN generation

Digital modules

OH 89 2

Twin DVB-C/-T/-T2 - COFDM transmodulation with CI

Technical Data	
Input	
Input frequency range	45…862 MHz
Input frequency steps	1 kHz
Channel bandwidth	6/7/8 MHz
channel bandwidth DVB-T2	1,7 / 5 / 6 / 7 / 8 MHz
Input level range	47...90 dBµV
FEC DVB-C	Conv., RS 188, 204
QAM-Modulationsart	QPSK, 16QAM, 64QAM,128QAM, 256QAM
QAM Symbolrate	1...7,2 Mbaud
FEC DVB-T	Conv., K=7, G=1/2, 2/3, 3/4, 4/5, 5/6, 7/8
Modulation schema DVB-T	QPSK, 16-, 64-QAM
Guard Intervall DVB-T	1/4, 1/8, 1/16, 1/32
FFT DVB-T	2k, 8k switchable
FEC DVB-T2	LDPC/BCH-Code 1/2, 2/3, 3/4, 4/5, 5/6, 3/5
Modulation scheme DVB-T2	QPSK, 16QAM, 64QAM, 256QAM
Guard Intervall DVB-T2	1/4, 1/8, 1/16, 1/32, 1/128, 19/128, 19/256
FFT DVB-T2	1k, 2k, 4k, 8k, 16k, 32k
Output	
Output frequency range	45…862 MHz (channel A)
Output frequency steps	250 kHz
Frequency stability	±30 kHz
Output channel bandwidth (coupelt)	2 x 7/8 MHz
Output level	82...97 dBµV (Depending on QAM-symbol rate)
Amplitude response (O-E)	±1 dB
Spurious suppression	≥50 dB
S/N	≥41 dB
MER	≥37 dB
Modulation	QPSK, 16-, 64-QAM
FEC	1/2, 2/3, 3/4, 5/6, 7/8
Guard Interval	1/4, 1/8, 1/16, 1/32

Packaging Data	
Sales unit	1 pcs.
Dimensions (WxHxD) sales unit	340 x 170 x 70 mm
Packaging volume sales unit	dm^3
Gross weight sales unit	0.494 kg
Shipping unit	pcs.
Dimensions (WxHxD) shipping unit	mm
Packaging volume shipping package	2.681

Powerful technology, compact dimensions, modular and flexibly expandable; the WISI COMPACT HEADEND System OH combines all the advantages of an innovative and affordable headend. WISI Compact Headend OH is easy to configure. With up to 14 module slots it offers channel processing for 14 analogue or 28 digital channels in a 3 HU 19" rack chassis. WISI Compact Headend OH operates on a high efficiency power supply, with low consumption modules in order to make a minimum ecological impact and a low operational cost. The USB connection and the RJ45 interface can be used to execute software updates for the basic unit as well as for the modules. Furthermore, all functions can be furnished from a distance per web browser.

characteristics

- Reception of two DVB-T / T2 / C signals and transmodulation into two COFDM-TV channels (coupled)
- 2x CI slots for central decryption
- MPEG 2 and MPEG 4 compatible
- PID filtering
- NIT and LCN generation

Input distribution panels

DC 28 4S0T

Input splitter for 4x7 Sat outputs

characteristics

- 3x 7 SAT-outputs, 1x 7 terrestrial outputs
- DC-bypass for the LNB-supply (SAT)
- 19" input distributor for channel processing systems

Technical Data	
Input	
Numer SAT	28 pcs.
Number TERR	- pcs.
Frequency range-SAT	920...2150 MHz
Frequency range TERR	- MHz
Output	
Output return loss	>12 dB
Through loss	<14 dB (±2,5 dB)
Isolation	>23 dB
Connectors	
F-female	32 pcs.
General data	
Power passing	<21 V DC
Power passing	<1,5 A
Dimensions (width x height x depth)	483 x 44 x 51 mm
Operating temperature range	-20...+55 °C

Packaging Data	
Sales unit	1 pcs.
Dimensions (WxHxD) sales unit	520 x 65 x 0065 mm
Packaging volume sales unit	dm^3
Gross weight sales unit	1.7 kg
Shipping unit	pcs.
Dimensions (WxHxD) shipping unit	mm
Packaging volume shipping package	2.2

Output collector

DM 17 A

Passive headend combiner

Technical Data	
Frequency range	5...1000 MHz
Input impedance	75 Ω
Input return loss	>18 dB typ., min. 14 dB
Number of taps	12
Output impedance	75 Ω
Output return loss	>18 dB typ., min 13 dB
Tap loss IN-Out	1...12 < 18 dB (±1,5 dB)
Amplitude response (O-E)	<1,5 dB
Isolation Out-Out	>40 dB typ., min. 36 dB
Test Port	-20 dB
RF-screening	>110 dB
Power passing	- V DC
General data	
Dimensions (width x height x depth)	483 x 44 x 124 mm
Temperature range	-20...+55 °C
Connectors	
Output	1x F-connector
Input	12x F-connector
Test	1x F-connector

characteristics

- Compact design, rack mounted
- High isolation
- Low insertion loss
- full bandwidth from 5...1000 MHz
- Front panel test port for easy monitoring

A DM 17 A is a passive headend combiner. Because of its compact construction it is possible to install it in a cabinet. The frequency range is 5...1000 MHz and it has a low insertion loss. The input and output impedance amounts to 75 Ohm. A test connection in F-technology is available on the front for easy monitoring.

Mounting accessories

ZG 80

Mounting set for input splitter DC 28 to basic unit OH 50

Technical Data	
General data	
Dimensions (width x height x depth)	80 x 37 x 20 mm

characteristics

- 19" Mountingangle
- Suitable for basic unit OH 50 A and DC 28
- Scope of delivery 1 pair

The ZG 80 is a mounting kit to attach the input splitter DC 28 on the basic unit OH 50.

HIPER ANTENNA

HDMI Modulator

OE 01

Encoder Modulator HDMI in DVB-C/T; ATSC-T/C; DTMB

Technical Data	
HDMI-Input	
HDMI number of ports	1 pcs. (HDMI)
Input format HDMI	1080i50/60, 720p50/60, 576p50, 480p60, 576i50, 480i60
HDCP Support	No
Video Encoding	
Encoding capacity	1x HD MPEG-4
Video system	1x MPEG-4 HD
Picture size	1080i50/60, 720p50/60, 576p50, 480p60, 576i50, 480i60
Bit rate	2...23 Mbps
Subtitle DVB Support	No
Subtitle OP47 Support	No
Frame rate conversion	No
Test pattern	No
Audio Encoding	
Audio-system	ISO 11173-3 (MPEG-1 L2)
Sampling frequency	44.1, 48 kHz
Bit rate	32...320 Kbps
Processing	
PID filtering and remapping	Yes
Advanced PSI/SI regeneration	Yes
NIT generation	Yes
Output	
Output level	59...99 dBµV (adjustable)
Connectors	
F-socket RF- output	2 pcs.
HDMI input	1 pcs. (for type A connector)
General data	
Supply voltage	12 V DC (600 mA)
Power consumption	max. ≤6 W
HDMI status LED	Green

characteristics

- 1 HDMI input supporting all resolutions up to 1080p60.
- 1 HF loop-through input for feeding in existing DVB-C/T signals
- MPEG4 Videocompression
- Switchable output modulation (DVB-C, DVB-T, DTMB and ATSC-T/C)
- Freely adjustable output frequency up to 1218 MHz
- User-friendly programming without additional software/hardware
- Adjustable NIT/LCN parameters
- Compact dimensions and easy assembly

Handset

OH 41

Handset

Technical Data	
Display	
Kind of display	LCD Dot Matrix
control panel	
buttons	4 pcs.
Connectors	
RJ11	1 pcs.
General data	
Power supply	5 V DC
Dimensions (width x height x depth)	130 x 76 x 23 mm
length of connection cable	1.2 m (max.)
Operating temperature range	0...+50 °C

characteristics

- Programming device for OH 50 A and OH 40 A
- Handy dimensions
- Integrated LED for ambient lighting

Handset for programming of COMPACT HEADEND module with data storage

Amplifiers

WISI Amplifiers:
Strong types for every application.

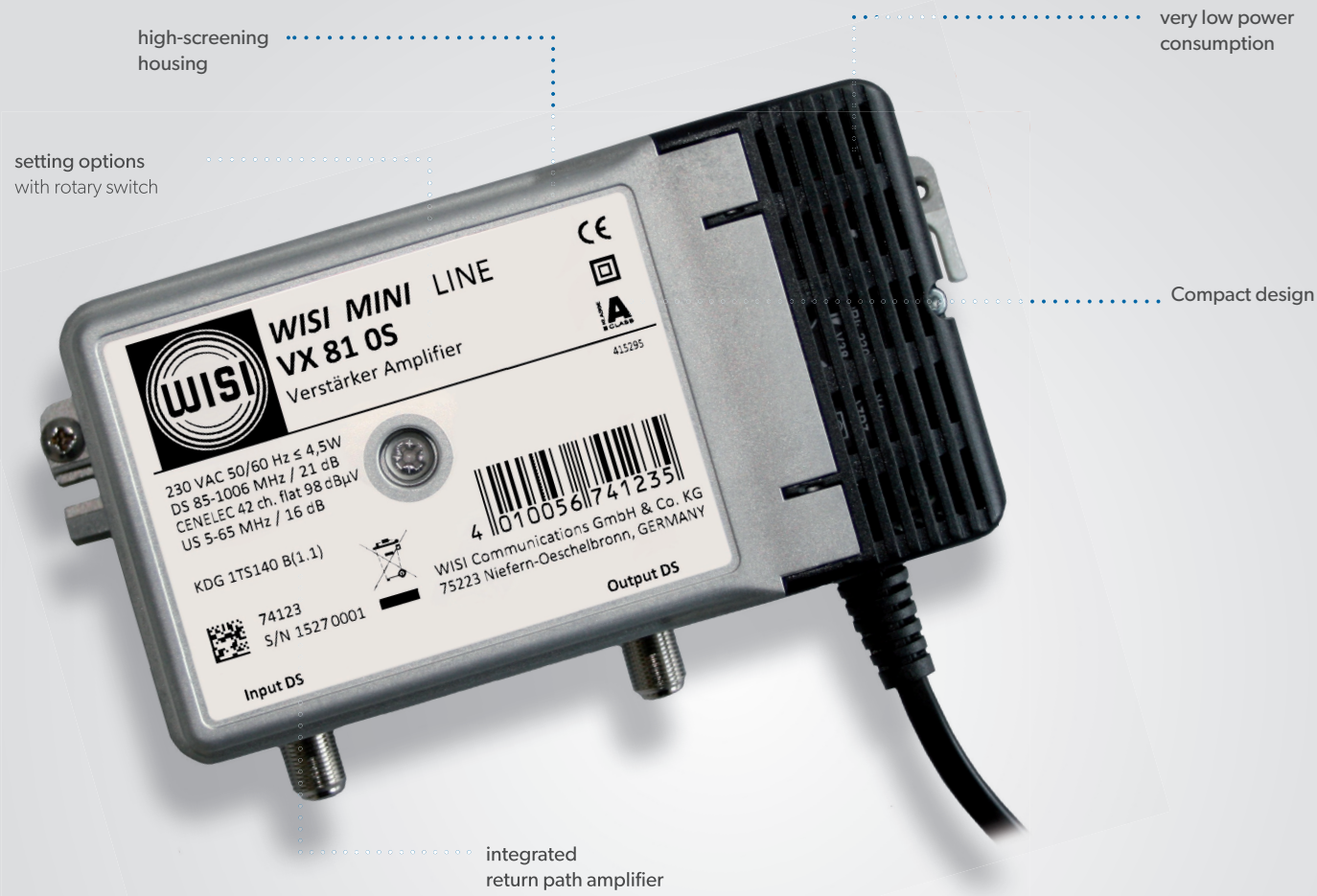

WISI in-house distribution amplifiers meet all requirements. From connection in a single-family house or in multiple-family homesWISI has the right type with the right performance for you.

All amplifiers have a robust, corrosion-resistant zinc die-cast housing with fins for excellent air circulation and heat dissipation, are multimedia capable and meet class A requirements.

WISI in-house distribution amplifiers convince with most modern technology and are approved by the cable network operators for installation.

At a glance

- certified by the network operators
- high efficiency
- compact design
- low power consumption

Mini Line In-house distribution amplifier

VX 81 OS

Homeamplifier,1 GHz, KDG 1TS140

KLASSE A CLASS

VX 83 OS

Homeamplifier,1 GHz, KDG 1TS140

KLASSE A CLASS

characteristics

- Compact housing MiniLine
- All RF connections F-connector
- setting elements with rotary switch
- Flap-lid for easy handling
- Approved by Vodafone Kabel Deutschland

Technical Data		
Down-Stream / DS		
Frequency range downstream	85...1006 MHz	85...1006 MHz
Gain downstream	21 dB	31 dB
Frequency response	≤ ± 0,8 dB	≤ ± 0,8 dB
Output level	≥ 98 dBµV (CENELEC 42 Ch, flat, CTB/CSO ≥ 60 dB)	≥ 102 dBµV (CENELEC 42 Ch, flat, CTB/CSO ≥ 60 dB)
IN-ATT (adjuster)	0...20 dB	0...20 dB
IN-EQ (adjuster)	0...20 dB	0...20 dB
Interstage-EQ (fix)	3 dB	3 dB
Noise figure	≤ 7 dB	≤ 6,5 dB
Upstream (US)		
US frequency range	5...65 MHz	5...65 MHz
Gain upstream	16 dB	25 dB
Frequency response upstream	≤ ± 0,8 dB	≤ ± 0,8 dB
Output level	120 dBµV (KDG TS140 medium load; BER <1e 10-6)	120 dBµV (KDG TS140 medium load; BER <1e 10-6)
IN-ATT (adjuster)	0...20 dB	0...20 dB
Noise figure	≤ 7 dB	≤ 4,5 dB
General data		
HF-connections	F	F
Impedance	75 Ω	75 Ω
Return loss	≥ 14 dB (>40 MHz - 1,5 dB Oktave ≥10 dB)	≥ 14 dB (>40 MHz - 1,5 dB Oktave ≥10 dB)
Lightning protection	1 kV (severity 1 / EN60728-3)	1 kV (severity 1 / EN60728-3)
EMC	EN50083-2	EN50083-2
Dimensions (width x height x depth)	163 x 90 x 50 mm	163 x 90 x 50 mm
Supply voltage	230 V (± 10%)	230 V (± 10%)
Power consumption max.	≤ 4,5 W	≤ 5,5 W
Ambient temperature	-20...+55 °C	-20...+55 °C
Storage temperature	-25...+75°C	-25...+75°C
Protection class	IP20	IP20

Mini Line In-house distribution amplifier

VX 86

In-house amplifier

KLASSE A CLASS

Technical Data	
Downstream	
Inputs	1 pcs.
Frequency range downstream	47...862 MHz
Gain downstream	18...21 dB
Noise figure downstream	<8 dB
Attenuator downstream	0...18 dB
Equalizer downstream	3...18 dB
Interstage equalizer downstream	3 dB (constant)
Output level 1	96 dBµV (DS, CENELEC 42 channels, flat)
Output level 2	98.5 dBµV (DS, CENELEC 42 channels, 6 dB slope)
Output level 3	114 dBµV (DS, EN50083-5, 3.Ord.)
Upstream	
Frequency range upstream	5...30 MHz (passive)
Connectors	
F-female	2 pcs.
General data	
Operating voltage AC	230 V (50/60 Hz)
Power consumption	3,5 W
EMC	Class A, EN 50083-2
Dimensions (width x height x depth)	163 x 90 x 47 mm
Operating temperature range	-20...+55 °C
Protection class	IP20
Lightning protection	1 kV (EN61000-4-5, 1,2/50 µs pulse)

Packaging Data	
Sales unit	1 pcs.
Dimensions (WxHxD) sales unit	166 x 143 x 50 mm
Packaging volume sales unit	dm^3
Gross weight sales unit	0.871 kg
Shipping unit	pcs.
Dimensions (WxHxD) shipping unit	mm
Packaging volume shipping package	1.2

Broadband in-house amplifier for use in coaxial networks recommended for 1-3 households

characteristics

- With passive return path
- Adjustable level and equalizer
- F-connectors
- Wall mounting
- Metal housing

Mini Line In-house distribution amplifier 4 outputs

VX 67 B

In-house amplifier

KLASSE A CLASS

Technical Data	
Downstream	
Inputs	1 pcs.
Frequency range downstream	85...1006 MHz
Gain downstream	6 dB
Output level 1	≥87 dBµV (CENELEC 42 channels, flat, at CSO/CTB >60 dB)
Upstream	
Frequency range upstream	5...65 MHz
Gain upstream	1 dB
Noise figure upstream	≤18 dB
Output level 4	116 dBµV (DIN. IMA2/3 >50 dB)
Connectors	
F-female	5 pcs.
General data	
Operating voltage AC	230 V (±10 %)
Power consumption	3 W
Screening factor	Class A, EN 50083-2
Dimensions (width x height x depth)	165x105x45 mm
Operating temperature range	-25...+75 °C
Protection class	IP20

Packaging Data	
Sales unit	1 pcs.
Dimensions (WxHxD) sales unit	166 x 150 x 50 mm
Packaging volume sales unit	dm³
Gross weight sales unit	0.87 kg
Shipping unit	pcs.
Dimensions (WxHxD) shipping unit	mm
Packaging volume shipping package	1.2

Broadband in-house amplifier for use in coaxial networks with direct connection for up to 4 antenna outlets.

characteristics

- Adjustable level and equalizer
- F-connectors
- Wall mounting
- Metal housing

HIPEL ANTENNA

Mini Line In-house distribution amplifier

VX 87

In-house amplifier

KLASSE A CLASS

Technical Data	
Downstream	Eingaenge Technische_Attribute 1
pcs.	
Frequency range downstream	47862
Gain downstream 2831	dB
Noise figure downstream <8	Decibel
Attenuator downstream	18 dB
Equalizer downstream	318 dB
Interstage equalizer downstream	3 dB (constant)
Output level 1	96 (DS, CENELEC 42 channels, flat)
Output level 2	985 (DS, CENELEC 42 channels, 6 dB slope)
Output level 3	114 (DS, EN50083-5, 3.Ord.)
Upstream	
Frequency range upstream	530 (passive)
Connectors	
F-female	2 pcs.
General data	
Operating voltage AC	230 V (50/60 Hz)
Power consumption 3.5	W
EMC Class A, EN 50083-2	
Dimensions (width x height x depth) 163 x 90 x 47	mm
Operating temperature range -20...+55	Celsius
Protection class IP20	
Lightning protection 1	Kilovolt (EN61000-4-5, 1,2/50 µs pulse)

Packaging Data	
Sales unit	1 pcs.
Dimensions (WxHxD) sales unit	166 x 143 x 50 mm
Packaging volume sales unit	dm^3
Gross weight sales unit	kg
Shipping unit	pcs.
Dimensions (WxHxD) shipping unit	mm
Packaging volume shipping package	12

With passive return path

characteristics

- Adjustable level and equalizer
- F-connectors
- Wall mounting
- Metal housing

Midi Line In-house distribution amplifier

VX 12 K4432

Cascadable Amplifier 1.2 GHz

KLASSE A CLASS

Technical Data	
Down-Stream / DS	
Frequency range downstream	258...1218 MHz
Gain downstream	44/36 dB
Frequency response	±0.8 dB
Return loss IN, OUT	≥ 16.5 dB -1.5 dB/Oct.
Noise figure	≤ 6 dB
Output level	≥ 109 dBµV (all QAM 120 x 256 QAM, BER ≤1x10-9, 7 dB slope)
Attenuator downstream	0...20 dB (Pad XP...)
cable simulator	0...8 dB (Pad XP...)
Input equalizer	0...14 dB (Pad XP...)
Interstage Slope	0/7 dB (Jumper)
Upstream (US)	
Frequency range upstream	5...204
Gain upstream	32 dB
Frequency Response	± 0.8 dB
In/Output return loss	≥18 dB (10...204 MHz)
Noise figure upstream	≤5 dB
Output level	≥108 dBµV (24x QAM256, BER ≤ 1x10-9, flat)
Interstage attenuator 0/6	dB (Jumper)
Attenuator upstream input	0...20 dB (Pad XP...)
Output equalizer	0...10 dB (Pad XP...)
Output attenuator	0...20 dB (Pad XP...)
Options	ICS-Receiver module 0/6/Off according to EN60728-14 -> VT21
General data	
Compliance	VF TS4002
RF Connector Amplifier	F
Impedance	75 Ω
Input RF test ponit	-20 dB +- 1 dB (10...204 MHz) -20dB +-2.5 dB (258...1218 MHz)
DS RF test point	-20 dB dB (±1 dB)
Supply voltage	230 V AC

Packaging Data	
Sales unit	1 pcs.
Dimensions (WxHxD) sales unit	178 x 61 x 131 mm
Packaging volume sales unit	1.42 dm³
Gross weight sales unit	0.68 kg
Shipping unit	1 pcs.

Compact 1,2 GHz cascadable house amplifier with one active output

characteristics

- Aluminium die-casting housing
- Function control LED
- External test points for input and output
- Measurement setup and procedure according to EN 60728-3
- Very low power consumption
- Interface for optional VT21 module
- Vodafone certified

Home Line In-house distribution amplifier

VX 45 D 3830

In-house amplifier

KLASSE A CLASS

Technical Data	
Downstream	
Inputs	1 pcs.
Input measurement socket	20 dB (resistance)
Frequency range downstream	85...1006 MHz
Gain downstream	38 dB
Noise figure downstream	<7,5 dB
Attenuator downstream	0...15 dB (1 dB-steps)
Equalizer downstream	0...22,5 dB (1,5 dB-steps)
Interstage attenuator downstream	0/6 dB (Jumper)
Interstage equalizer downstream	0/6 dB (Jumper)
Output level 1	≥107 dBµV (CENELEC 42 channels, flat, at CSO/CTB >60 dB)
Output test point	20 dB (directional coupler)
Upstream	
Frequency range upstream	5...65 MHz
Gain upstream	30 dB
Noise figure upstream	<6 dB
Attenuator upstream input	0...15 dB (1 dB-steps)
Attenuator upstream output	0/10 dB (Jumper)
Equalizer US	0/3/6/9 dB (Jumper)
Output level 4	120 dBµV (3 x 64 QAM-signals)
Connectors	
F-female	4 pcs.
General data	
Operating voltage AC	230 V
Power consumption	6 W
Screening factor	dB Class A, EN 50083-2
Dimensions (width x height x depth)	163 x 90 x 47 mm
Operating temperature range	-20...+55 °C
Protection class	IP20
Lightning protection	1 kV (EN61000-4-5, 1,2/50 µs pulse)

Packaging Data	
Sales unit	1 pcs.
Dimensions (WxHxD) sales unit	170 x 150 x 55 mm
Packaging volume sales unit	dm^3
Gross weight sales unit	0.67 kg
Shipping unit	pcs.
Dimensions (WxHxD) shipping unit	mm
Packaging volume shipping package	1.2

Broadband in-house amplifier for use in coaxial networks recommended for 7 to 18 households.

characteristics

- Zinc die-cast housing
- Return path amplifier and diplexer on board
- External test points
- Alignment by uninterruptible rotary switch and jumper
- Passive return path (jumper)

Home Line In-house distribution amplifier

VX 45 E

In-house amplifier

KLASSE A CLASS

Technical Data	
Downstream	
Inputs	1 pcs.
Input measurement socket	20 dB (resistance)
Frequency range downstream	47...862 MHz
Gain downstream	36 dB
Noise figure downstream	7.5 dB
Attenuator downstream	0...15 dB (1 dB steps)
Equalizer downstream	0...22,5 dB (1,5 dB-steps)
Interstage attenuator downstream	0/6 dB (Jumper)
Interstage equalizer downstream	0/6 dB (Jumper)
Output level 1	107 dBµV (CENELEC 42 channels, 6 dB slope, at CSO/CTB >60 dB)
Output test point	20 dB (directional coupler)
Connectors	
F-female	4 pcs.
General data	
Operating voltage AC	230 V
Power consumption	5 W
Screening factor	Class A, EN 50083-2
Dimensions (width x height x depth)	163 x 90 x 47 mm
Operating temperature range	-20...+55 °C
Protection class	IP20
Lightning protection	4 kV (EN61000-4-5, 1,2/50 µs pulse)

Packaging Data	
Sales unit	1 pcs.
Dimensions (WxHxD) sales unit	170 x 150 x 55 mm
Packaging volume sales unit	dm^3
Gross weight sales unit	0.726 kg
Shipping unit	pcs.
Dimensions (WxHxD) shipping unit	mm
Packaging volume shipping package	1.2

Broadband in-house amplifier for use in coaxial networks recommended for 7 to 18 households

characteristics

- high quality downstream amplifier with band 1
- Zinc die-cast housing
- External test points
- Alignment by uninterruptible rotary switch

Value Line In-house distribution amplifier

VX 26 BH 60A

Value Line CATV Amplifier, remote powered, 1,2 GHz

Technical Data	
Down-Stream / DS	
Frequency range	85...1218/ 258...1218 (F1/F2)
Noise figure	9 dB
Gain	44 dB (±1 dB)
Frequency response	±0,75 dB
Input attenuator	0...20 dB (0,5 dB steps)
Interstage cable simulator	0/5/10 dB
Interstage attenuator	0...20 dB (0,1 dB steps)
Interstage equalizer	0...25 dB (0,1 dB steps)
Interstage Slope	0...15 dB (1 dB steps)
Output level	110 dBµV (all QAM (138 x 256 QAM), BER <1e-9, flat)
Output level	112 dBµV (all QAM (138 x 256 QAM), BER <1e-9, 12 dB slope)
Output level	113 dBµV (CENELEC 41 Ch. (CSO/ CTB ≥ 60 dB), flat)
Output level	115 dBµV (CENELEC 41 Ch. (CSO/ CTB ≥ 60 dB), 12 dB slope)
ALSC Mode	off/one pilot/two pilots Pilot frequency 40...1002 MHz / 0.1 dB steps
Input test point (bidirectional)	-20 dB (±1,5 dB to 858 MHz / ±2 dB 1218 MHz)
Output test point (directional coupler)	-20 dB (±0,75 dB)
Upstream (US)	
Frequency range	5...65/5...204 MHz (F1/F2)
Gain	32 dB (±0,75 dB)
Frequency response	±0,75 dB
Input attenuator	0...15 dB (0,5 dB steps)
Interstage equalizer	0...12 dB (1 dB steps)
Interstage attenuator	0...15 dB (0,5 dB steps)
Noise figure	8 dB

Technical Data	
Output level	113 dBµV ((8 x 256 QAM), BER <1E-9, US 65 MHz)
Output level	107 dBµV ((24 x 256 QAM), BER <1E-9, US 204 MHz)
NPR >50 dB	>50dB (60 MHz load / -7dBuV / dyn. ≥ 22 dB)
NPR >50 dB	>50dB (192 MHz load / -7dBuV / dyn. ≥ 16 dB)
Ingress Control Switch (ICS)	0/ -6/ <-45 dB (Opt.with Receiver-mod)

Packaging Data	
Sales unit	1 pcs.
Dimensions (WxHxD) sales unit	350 x 290 x 175 mm
Packaging volume sales unit	17.8 dm³
Gross weight sales unit	2.1 kg
Shipping unit	1 pcs.
Dimensions (WxHxD) shipping unit	350 x 290 x 175 mm
Packaging volume shipping package	17.8

High output level up to 1,2 GHz

characteristics

- All settings (Gain, slope etc.) via WISI bluetooth App
- Auto Alignment for automatic level adjustment
- Automatic Level and Slope Control (ALSC) with adjustable pilot frequencies
- WISI FlexAccess technology for diplex switchover via Bluetooth or handheld
- Two integrated diplex filters (65 MHz and 204 MHz)
- Interface for optional Fostra module

Value Line In-house distribution amplifier

VX 29 BH 60A

Value Line CATV Amplifier, remote powered, 1,2 GHz

Technical Data	
Down-Stream / DS	
Frequency range	85...1218/ 258...1218 (F1/F2)
Noise figure	9 dB
Gain	44 dB (±1 dB)
Frequency response	±0,75 dB
Input attenuator	0...20 dB (0,5 dB steps)
Interstage cable simulator	0/5/10 dB
Interstage attenuator	0...20 dB (0,1 dB steps)
Interstage equalizer	0...25 dB (0,1 dB steps) / pivot point 1218 MHz
Interstage Slope	0...15 dB (1 dB steps) / pivot point 1218MHz
Output level	110 dBµV (all QAM (138 x 256 QAM), BER <1e-9, flat)
Output level	112 dBµV (all QAM (138 x 256 QAM), BER <1e-9, 12 dB slope)
Output level	113 dBµV (CENELEC 41 Ch. (CSO/ CTB ≥ 60 dB), flat)
Output level	115 dBµV (CENELEC 41 Ch. (CSO/ CTB ≥ 60 dB), 12 dB slope)
ALSC Mode	off/one pilot/two pilots Pilot frequency 40...1002 MHz / 0.1 dB steps
Input test point (bidirectional)	-20 dB (±1,5 dB to 858 MHz / ±2 dB 1218 MHz)
Output test point (directional coupler)	-20 dB (±0,75 dB)
Upstream (US)	
Frequency range	5...65/5...204 MHz (F1/F2)
Gain	32 dB (±0,75 dB)
Frequency response	±0,75 dB
Input attenuator	0...15 dB (0,5 dB steps)
Interstage equalizer	0...12 dB (1 dB steps)
Interstage attenuator	0...15 dB (0,5 dB steps)
Noise figure	8 dB

Technical Data	
Output level	113 dBµV ((8 x 256 QAM), BER <1E-9, US 65 MHz)
Output level	107 dBµV ((24 x 256 QAM), BER <1E-9, US 204 MHz)
NPR >50 dB	>50dB (60 MHz load / -7dBuV / dyn. ≥ 22 dB)
NPR >50 dB	>50dB (192 MHz load / -7dBuV / dyn. ≥ 16 dB)
Ingress Control Switch (ICS)	0/ -6/ <-45 dB (Opt.with Receiver-mod)

Packaging Data	
Sales unit	1 pcs.
Dimensions (WxHxD) sales unit	236 x 80 x 144 mm
Packaging volume sales unit	2.7 dm³
Gross weight sales unit	1.8 kg
Shipping unit	1 pcs.
Dimensions (WxHxD) shipping unit	300 x 92 x 189 mm
Packaging volume shipping package	5.2

High output level up to 1,2 GHz

characteristics

- All settings (Gain, slope etc.) via WISI bluetooth App
- Auto Alignment for automatic level adjustment
- Automatic Level and Slope Control (ALSC) with adjustable pilot frequencies
- WISI FlexAccess technology for diplex switchover via Bluetooth or handheld
- Two integrated diplex filters (65 MHz and 204 MHz)
- Interface for optional VT21 module, XM input and output modules Optional ICS receiver according to EN 60728-14

Value Line In-house distribution amplifier

VX 29 BH 80A

Value Line CATV Amplifier, remote powered, 1,2 GHz

Technical Data	
Down-Stream / DS	
Frequency range	108...1218/ 258...1218 (F1/F2)
Noise figure	9 dB
Gain	44 dB (±0,75 dB)
Frequency response	±0,75 dB
Input attenuator	0...20 dB (0,5 dB steps)
Interstage cable simulator	0/5/10 dB
Interstage attenuator	0...20 dB (0,1 dB steps)
Interstage equalizer	0...25 dB (0,1 dB steps) / pivot point 1218MHz
Interstage Slope	0...15 dB (1 dB steps) / pivot point 1218MHz
Output level	110 dBµV (all QAM (138 x 256 QAM), BER <1e-9, flat)
Output level	112 dBµV (all QAM (138 x 256 QAM), BER <1e-9, 12 dB slope)
Output level	113 dBµV (Cenelec 41 Ch,CTB/CSO >60 dB)
Output level	115 dBµV (Cenelec 41 Ch,CTB/CSO >60 dB slope 12 dB)
Input test point (bidirectional)	-20 dB (±1,5 dB to 858 MHz / ±2 dB 1218 MHz)
Output test point (directional coupler)	-20 dB (±0,75 dB)
Automatic level and slope control (ALSC)	
ALSC Mode	
Pilot frequencies	40...1002 MHz / 0.1 MHz
Upstream (US)	
Frequency range	5...85/5...204 MHz (F1/F2)
Gain	32 dB (±0,75 dB)
Frequency response	±0,75 dB
Input attenuator	0...15 dB (0,5 dB steps)
Interstage equalizer	0...12 dB (1 dB steps)
Interstage attenuator	0...15 dB (0,5 dB steps)
Noise figure	8 dB

Technical Data	
Output level	
F1 / 8 QAM256 BER <1E-9	>113 dBµV
NPR >50 dB	60 MHz load / -7 dBµV / dyn. >22 dB

Packaging Data	
Sales unit	1 pcs.
Dimensions (WxHxD) sales unit	236 x 80 x 144 mm
Packaging volume sales unit	2.7 dm³
Gross weight sales unit	1.8 kg
Shipping unit	1 pcs.
Dimensions (WxHxD) shipping unit	300 x 92 x 189 mm
Packaging volume shipping package	5.2

High output level up to 1,2 GHz

characteristics

- All settings (Gain, slope etc.) via WISI bluetooth App
- Auto Alignment for automatic level adjustment
- Automatic Level and Slope Control (ALSC) with adjustable pilot frequencies
- WISI FlexAccess technology for diplex switchover via Bluetooth or handheld
- Integrated diplex filters (85 MHz and 204 MHz)
- Interface for optional VT21 module, XM input and output modules Optional ICS receiver according to EN 60728-14

Value Line In-house distribution amplifier

VX 29 BH 82A

Value Line CATV Amplifier, remote powered, 1,2 GHz

Technical Data	
Down-Stream / DS	
Frequency range	108...1218/ 258...1218 (F1/F2)
Noise figure	9 dB
Gain	44 dB (± 0,75 dB)
Frequency response	±0,75 dB
Input attenuator	0...20 dB (0,5 dB steps)
Interstage cable simulator	0/5/10 dB
Interstage attenuator	0...20 dB (0,1 dB steps pivot point 1218 MHz)
Interstage equalizer	0...25 dB (0,1 dB steps)
Interstage Slope	0...15 dB (1 dB steps) / pivot point 1218MHz
Output level	110 dBµV (all QAM (138 x 256 QAM), BER <1e-9, flat)
Output level	112 dBµV (all QAM (138 x 256 QAM), BER <1e-9, 12 dB slope)
Output level	113 dBµV (CENELEC 41 Ch. (CSO/ CTB > 60 dB), flat)
Output level	115 dBµV (CENELEC 41 Ch. (CSO/ CTB > 60 dB), 12 dB slope)
ALSC Mode	off/one pilot/two pilots Pilot frequency 40...1002 MHz / 0.1 MHz steps
Input test point (bidirectional)	-20 dB (±1,5 dB to 858 MHz / ±2 dB 1218 MHz)
Output test point (directional coupler)	-20 dB (±0,75 dB)
Upstream (US)	
Frequency range	5...85/5...204 MHz (F1/F2)
Gain	32 dB (±0,75 dB)
Frequency response	±0,75 dB
Input attenuator	0...15 dB (0,5 dB steps)
Interstage equalizer	0...12 dB (1 dB steps)
Interstage attenuator	0...15 dB (0,5 dB steps)
Noise figure	8 dB

Technical Data	
Output level	113 dBµV ((8 x 256 QAM), BER <1E-9, US 85 MHz)
Output level	107 dBµV ((24 x 256 QAM), BER <1E-9, US 204 MHz)
NPR >50 dB	>50dB (60 MHz load / -7dBuV / dyn. ≥ 22 dB)
NPR >50 dB	>50dB (192 MHz load / -7dBuV / dyn. ≥ 16 dB)
Ingress Control Switch (ICS)	0/ -6/ <-45 dB (Opt.with Receiver-mod)

Packaging Data	
Sales unit	1 pcs.
Dimensions (WxHxD) sales unit	197 x 86 x 158 mm
Packaging volume sales unit	2.7 dm³
Gross weight sales unit	1.6 kg
Shipping unit	1 pcs.
Dimensions (WxHxD) shipping unit	285 x 90 x 180 mm
Packaging volume shipping package	4.6

High output level up to 1,2 GHz

characteristics

- All settings (Gain, slope etc.) via WISI bluetooth App
- Auto Alignment for automatic level adjustment
- Automatic Level and Slope Control (ALSC) with adjustable pilot frequencies
- WISI FlexAccess technology for diplex switchover via Bluetooth or handheld
- Two integrated diplex filters (85 MHz and 204 MHz)
- Interface for optional VT21 module, XM input and output modules Optional ICS receiver according to EN 60728-14

Value Line In-house distribution amplifier

VX 29 BL 80A

Value Line CATV Amplifier, remote powered, 1,2 GHz

Technical Data	
Down-Stream / DS	
Frequency range	108...1218/ 258...1218 (F1/F2)
Noise figure	9 dB
Gain	44 dB (± 0,75 dB)
Frequency response	±0,75 dB
Input attenuator	0...20 dB (0,5 dB steps)
Interstage cable simulator	0/5/10 dB
Interstage attenuator	0...20 dB (0,1 dB steps pivot point 1218 MHz)
Interstage equalizer	0...25 dB (0,1 dB steps)
Interstage Slope	0...15 dB (1 dB steps) / pivot point 1218MHz
Output level	106 dBµV (all QAM (138 x 256 QAM), BER <1e-9, flat)
Output level	108 dBµV (all QAM (138 x 256 QAM), BER <1e-9, 12 dB slope)
Output level	111 dBµV (CENELEC 41 Ch. (CSO/ CTB > 60 dB), flat)
Output level	113 dBµV (CENELEC 41 Ch. (CSO/ CTB > 60 dB), 12 dB slope)
ALSC Mode	off/one pilot/two pilots Pilot frequency 40...1002 MHz / 0.1 MHz steps
Input test point (bidirectional)	-20 dB (±1,5 dB to 858 MHz / ±2 dB 1218 MHz)
Output test point (directional coupler)	-20 dB (±0,75 dB)
Upstream (US)	
Frequency range	5...85/5...204 MHz (F1/F2)
Gain	32 dB (±0,75 dB)
Frequency response	±0,75 dB
Input attenuator	0...15 dB (0,5 dB steps)
Interstage equalizer	0...12 dB (1 dB steps)
Interstage attenuator	0...15 dB (0,5 dB steps)
Noise figure	8 dB

Technical Data	
Output level	113 dBµV ((8 x 256 QAM), BER <1E-9, US 85 MHz)
Output level	107 dBµV ((24 x 256 QAM), BER <1E-9, US 204 MHz)
NPR >50 dB	>50dB (60 MHz load / -7dBuV / dyn. ≥ 22 dB)
NPR >50 dB	>50dB (192 MHz load / -7dBuV / dyn. ≥ 16 dB)
Ingress Control Switch (ICS)	0/ -6/ <-45 dB (Opt.with Receiver-mod)

Packaging Data	
Sales unit	1 pcs.
Dimensions (WxHxD) sales unit	236 x 80 x 144 mm
Packaging volume sales unit	2.7 dm³
Gross weight sales unit	1.8 kg
Shipping unit	1 pcs.
Dimensions (WxHxD) shipping unit	232 x 158 x 86 mm
Packaging volume shipping package	5.2

High output level up to 1,2 GHz

characteristics

- All settings (Gain, slope etc.) via WISI bluetooth App
- Auto Alignment for automatic level adjustment
- Automatic Level and Slope Control (ALSC) with adjustable pilot frequencies
- WISI FlexAccess technology for diplex switchover via Bluetooth or handheld
- Two integrated diplex filters (85 MHz and 204 MHz)
- Interface for optional VT21 module, XM input and output modules Optional ICS receiver according to EN 60728-14

Value Line In-house distribution amplifier

VX 26 H

In-house/distribution amplifier, locally powered

KLASSE A CLASS

Technical Data	
Downstream	
Inputs	1 pcs.
Input measurement socket	20 dB (resistance)
Input return loss	>18 dB (-1 dB/oct.)
Frequency range downstream	85...1006 MHz
Gain downstream	41 dB
Noise figure downstream	<6 dB up to 600 MHz; <9 dB up to 1000 MHz
Attenuator downstream	0...15 dB (1 dB-steps)
Equalizer downstream	0...22,5 dB (1,5 dB-steps)
Interstage attenuator downstream	0/5 dB (Jumper)
Interstage equalizer downstream	0/3/6/9 dB (Jumper)
Output level 1	111 dBµV (CENELEC 42 channels, flat, CSO/CTB >60 dB/>60 dB)
Output level 2	114 dBµV (CENELEC 42 channels, 6dB slope, CSO/CTB >60 dB/>60 dB)
Output test point	-20 dB (directional coupler)
Upstream	
Frequency range upstream	5...65 MHz
Gain active/passiv	24 dB / -4 dB
Noise figure upstream	<6 dB
Attenuator upstream input	0...15 dB (1 dB-steps)
Attenuator upstream output	0...15 dB (1 dB-steps + 5 dB Interstage Jumper)
Equalizer US	0/3/6/9 dB (Jumper)
Output level US	112 dBµV (2nd, 3rd order)
Output test jack US	-20 dB
Connectors	
F-socket	3 pcs.
General data	
Operating voltage AC	180...265 V (50/60 Hz)
Power consumption	18 W
Screening factor	Class A, EN 50083-2
Dimensions (width x height x depth)	231 x 158 x 85 mm
Operating temperature range	-20...+55 °C
Protection class	IP66
Lightning protection	4 kV (EN61000-4-5, 1,2/50 µs pulse)

characteristics

- Uninterruptible setting
- Screwed, folding housing cover
- Integrated return channel and diplexers
- All settings via exact switching step (Q-step) or jumper
- Output splitter (jumper)
- Lightning protection HF- connections 4 kV

The VX 26 H is a local feeding distribution amplifier with an integrated feedback channel and diplex filter. The settings can be adjusted via jumper or Q-steps and therefore an uninterrupted adjustment option is possible.

ANTENA

Value Line In-house distribution amplifier

VX 29 H

In-house distribution amplifier, remote powered

KLASSE A CLASS

characteristics

- Uninterruptible setting
- Screwed, folding housing cover
- Integrated return channel and diplexers
- All settings via exact switching step (Q-step) or jumper
- Output splitter (jumper)
- Lightning protection HF- connections 4 kV

Technical Data	
Downstream	
Input measurement socket	-20 dB (resistance)
Input return loss	>18 dB (-1 dB/oct.)
Frequency range downstream	85...1006 MHz
Gain downstream	41 dB
Noise figure downstream	<6 dB up to 600 MHz; <9 dB up to 1000 MHz
Attenuator downstream	0...15 dB (1 dB-steps)
Equalizer downstream	0...22,5 dB (1,5 dB-steps)
Interstage attenuator downstream	0/5 dB (Jumper)
Interstage equalizer downstream	0/3/6/9 dB (Jumper)
cable simulator downstream	0/5 dB (Jumper)
Output level 1	111 dBµV (CENELEC 42 channels, flat, CSO/CTB >60 dB/>60 dB)
Output level 2	114 dBµV (CENELEC 42 channels, 6dB slope, CSO/CTB >60 dB/>60 dB)
Output test point	-20 dB (directional coupler)
Upstream	
Frequency range upstream	5...65 MHz
Gain active/passiv	24 dB / -4 dB
Noise figure upstream	<6 dB
Attenuator upstream input	0...15 dB (1 dB-steps)
Attenuator upstream output	0...15 dB (1 dB-steps, + 5 dB Interstage Jumper)
Equalizer US	0/3/6/9 dB (Jumper)
Output level US	112 dBµV (2nd, 3rd order)
Output test jack US	-20 dB
Connectors	
PG11	3 pcs.
General data	
Operating voltage AC	27...65 V
Power consumption	18 W
Remote power	7 A
Screening factor	Class A, EN 50083-2
Dimensions (width x height x depth)	231x158x85 mm
Operating temperature range	-20...+55 °C
Protection class	IP66

Technical Data	
Lightning protection	4 kV (EN61000-4-5 1,2/50 µs pulse)

Broadband distribution amplifier with remote feeding for use in coaxial networks.

ANTENNA

Value Line In-house distribution amplifier

VX 26 M1

VALUE LINE distribution amplifier

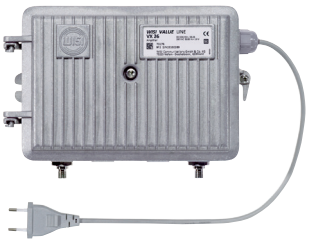

characteristics

- Super compact housing
- High output level
- High gain

Technical Data	
Downstream	
Frequency range	47...1006 MHz
Return loss	≥ 18 dB (-1 dB/oct.)
Noise figure	≤ 6,0 dB (47...862 MHz), ≤ 8,0 dB (862...1006 MHz)
Gain	36 dB
Frequency response	≤ ± 0,5 dB (47...862 MHz), ≤ ± 0,75 dB (47...1006 MHz)
Input attenuator	0...22,5 dB (1,5 dB-steps)
Input equalizer	0...22,5 dB (1,5 dB-steps)
Interstage Slope	0/2/8/10 dB (Jumper)
Interstage attenuator	0/6 dB (Jumper)
Distortion products for CENELEC 42 Ch. @ 111 dBµV flat	(CSO/CTB = 60 dB)
Distortion products for CENELEC 42 Ch. @ 114 dBµV 8 dB slope	(CSO/CTB = 60 dB)
RF test point output (Coupler)	-20 dB
General data	
Impedance	75 Ω
RF connectors	F
Supply voltage	180...265 V AC
Surge protection power supply	2 kV (EN61000-4-5, 1,2/50 µs pulse)
Power consumption	typ. 16 W
Ambient temperature	-20...+55 °C
Storage temperature	-25...+75 °C
Protection class	IP 66
Electro Magnetic Compatibility (EMC)	EN 50083-2
Lightning protection	4 kV (EN61000-4-5 1,2/50 µs pulse)
Dimensions (width x height x depth)	231 x 145 x 85 mm

HUANTENA

Value Line accessories

XP 0000 … 0020

Attenuator path, 0 to 20 dB

Technical Data	
Through loss	0 bis 20 dB
Frequency range	5…1006 MHz

characteristics

- Permanent attenuation value from 0 to 20 dB
- Use in amplifiers of VX-Series
- Simple pluggable design

XP BOX 01

attenuator pad set 0…20 dB

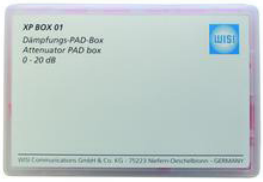

Technical Data	
Through loss	0…20 dB (single Pads with the measurements 0…20 dB)

characteristics

- Box consisting of damping pads with 0. . . 20 dB
- Ideal basic equipment with 10 or 20 pieces per damping value
- Use in amplifiers VX 16 and VX 19

XE 54 A

System equalizer

Technical Data	
Equalization	2 dB Boost in the frequency range 65…90/125…430/430…850 MHz

XE 29

power supply connector for VX 29

HIPER ANTENA

Compact Line HFC amplifier

VX 52 B

Compact Line CATV Amplifier

Technical Data	
Down-Stream / DS	
Frequency range downstream	85...1218 MHz (1 GHz/1,2 GHz equalizer switchable)
Gain downstream	46 dB (± 0,75 dB), (single output)
Frequency response	≤ ± 0,5 dB
Noise figure	≤ 6,5 dB @ 1 GHz, ≤ 8,0 dB @ 1,2 GHz
Output level	115 dBµV (CENELEC 42 Ch. (CSO/ CTB ≥ 60 dB), flat)
Output level	118 dBµV (CENELEC 42 Ch. (CSO/ CTB ≥ 60 dB), 9 dB slope @ 862 MHz)
Output level	109 dBµV (all QAM (138 x 256 QAM), EN60728-3-1, flat)
Output level	111 dBµV (all QAM (138 x 256 QAM), EN60728-3-1, 12 dB slope @ 1218 MHz)
Input return loss	≥ 20 dB (-1,5 dB/Oct.)
Attenuator downstream	0...20 dB (0,1 dB steps)
Interstage attenuator downstream	0...20 dB (1 dB steps)
Equalizer downstream	0...15 dB (0,1 dB steps)
Interstage equalizer downstream	0...15 dB (1 dB steps)
RF test points	- 20 dB
Upstream (US)	(optional accessory VX50Bxxxx)
Frequency range upstream	5...65/85/204 MHz
High pass filter switchable	12 MHz
Gain upstream	30 dB
Frequency response upstream	≤ ± 0,5 dB
Noise figure upstream	≤ 5,5 dB
Output level	115 dBµV (CLC/TS50083-3-3 (BER ≤1 E-8, MER ≥35 dB), 5...65 MHz (6 x 64 QAM))
Output level	111 dBµV (CLC/TS50083-3-3 (BER ≤1 E-8, MER ≥35 dB), 5...204 MHz (22 x 64 QAM))
NPR (>50 dB) EN60728-3	16 dBµV/Hz (max. input level (60 MHz load), 26 dB dyn. range)
NPR (>50 dB) EN60728-3	12 dBµV/Hz (max. Input level (200 MHz load), 23 dB dyn. range)
Return loss upstream (in / output)	≥ 20 dB (-1,5 dB/Oct.)
Attenuator upstream input	0...30 dB (1 dB steps)

Technical Data	
Attenuator upstream output	0...30 dB (1 dB steps)
Equalizer US	0...15 dB (0,5 dB steps)
ICS, US	0/ -6/ < -45 dB

Packaging Data	
Sales unit	1 pcs.
Dimensions (WxHxD) sales unit	350 x 290 x 175 mm
Packaging volume sales unit	dm^3
Gross weight sales unit	3.95 kg
Shipping unit	1 pcs.
Dimensions (WxHxD) shipping unit	mm
Packaging volume shipping package	15

The VX 52 B is a local feeding universal line and distribution amplifier that has one active output and additional slots for return channel amplifiers, control modules, diplex filter modules and splitter/tap modules. All settings can be accessed via an OH 41 handset or an Android app via Bluetooth.

characteristics

- Compact 1 GHz / 1,2 GHz high level CATV amplifier
- Locally supplied
- All settings (gain, slope etc.) by WISI control unit (OH 41 Handset) or Android app via bluetooth
- Includes interface for NMS functionality: HMS or DOCSIS
- Management functionality according to EN 60728-14 available (ICS setting)
- Diplex filters and splitter / tap modules pluggable
- High level upstream amplifier pluggable
- ALSC module pluggable (VX 58B)
- Additional universal plug in modules

Compact Line HFC amplifier

VX 53 B

Compact Line CATV Amplifier

Technical Data	
Down-Stream / DS	
Frequency range downstream	85...1218 MHz (1 GHz/1,2 GHz equalizer switchable)
Gain downstream	46 dB (± 0,75 dB), (single output)
Frequency response	≤ ± 0,5 dB
Noise figure	≤ 6,5 dB @ 1 GHz, ≤ 8,0 dB @ 1,2 GHz
Output level	115 dBµV (CENELEC 42 Ch. (CSO/ CTB ≥ 60 dB), flat)
Output level	118 dBµV (CENELEC 42 Ch. (CSO/ CTB ≥ 60 dB), 9 dB slope @ 862 MHz)
Output level	109 dBµV (all QAM (138 x 256 QAM), EN60728-3-1, flat)
Output level	111 dBµV (all QAM (138 x 256 QAM), EN60728-3-1, 12 dB slope @ 1218 MHz)
Input return loss	≥ 20 dB (-1,5 dB/Oct.)
Attenuator downstream	0...20 dB (0,1 dB steps)
Interstage attenuator downstream	0...20 dB (1 dB steps)
Equalizer downstream	0...15 dB (0,1 dB steps)
Interstage equalizer downstream	0...15 dB (1 dB steps)
RF test points	- 20 dB
Upstream (US)	(optional accessory VX50Bxxxx)
Frequency range upstream	5...65/85/204 MHz
High pass filter switchable	12 MHz
Gain upstream	30 dB
Frequency response upstream	≤ ± 0,5 dB
Noise figure upstream	≤ 5,5 dB
Output level	115 dBµV (CLC/TS50083-3-3 (BER ≤1 E-8, MER ≥35 dB), 5...65 MHz (6 x 64 QAM))
Output level	111 dBµV (CLC/TS50083-3-3 (BER ≤1 E-8, MER ≥35 dB), 5...204 MHz (22 x 64 QAM))
NPR (>50 dB) EN60728-3	16 dBµV/Hz (max. input level (60 MHz load), 26 dB dyn. range)
NPR (>50 dB) EN60728-3	12 dBµV/Hz (max. Input level (200 MHz load), 23 dB dyn. range)
Return loss upstream (in / output)	≥ 20 dB (-1,5 dB/Oct.)
Attenuator upstream input	0...30 dB (1 dB steps)

Technical Data	
Attenuator upstream output	0...30 dB (1 dB steps)
Equalizer US	0...15 dB (0,5 dB steps)
ICS, US	0/ -6/ < -45 dB

Packaging Data	
Sales unit	1 pcs.
Dimensions (WxHxD) sales unit	350 x 290 x 175 mm
Packaging volume sales unit	dm^3
Gross weight sales unit	0.355 kg
Shipping unit	1 pcs.
Dimensions (WxHxD) shipping unit	mm
Packaging volume shipping package	15

The VX 53 B is a remote feeding universal line and distribution amplifier that has one active output and additional slots for return channel amplifiers, control modules, diplex filter modules and splitter/tap modules. All settings can be accessed via an OH 41 handset or an Android app via Bluetooth.

characteristics

- Compact 1 GHz / 1,2 GHz high level CATV amplifier
- Remote powered
- All settings (gain, slope etc.) by WISI control unit (OH 41 Handset) or Android app via bluetooth
- Includes interface for NMS functionality: HMS or DOCSIS
- Management functionality according to EN 60728-14 available (ICS setting)
- Diplex filters and splitter / tap modules pluggable
- High level upstream amplifier pluggable
- ALSC module pluggable (VX 58B)
- Additional universal plug in modules

Compact Line HFC amplifier

VX 56 B

Compact Line CATV Amplifier

characteristics

- Compact 1 GHz/1,2 GHz high level CATV amplifier with two active high level outputs
- Locally supplied
- All settings (gain, slope etc.) by WISI control unit (OH 41 Handset) or Android app via bluetooth
- Includes interface for NMS functionality: HMS or DOCSIS
- Management functionality according to EN 60728-14 available (ICS setting)
- Diplex filters and splitter / tap modules pluggable
- High level upstream amplifier pluggable
- ALSC modul pluggable
- Additional universal plug in modules

Technical Data	
Down-Stream / DS	
Frequency range downstream	85...1218 MHz (1 GHz/1,2 GHz equalizer switchable)
Gain downstream	2 x 44 dB (± 0,75 dB)
Frequency response	≤ ± 0,5 dB
Noise figure	<6,5 dB @ 1 GHz, <8,0 dB @ 1,2 GHz
Output level	115 dBµV (CENELEC 42 Ch. (CSO/ CTB ≥ 60 dB), flat)
Output level	118 dBµV (CENELEC 42 Ch. (CSO/ CTB ≥ 60 dB), 9 dB slope @ 862 MHz)
Output level	109 dBµV (all QAM (138 x 256 QAM), EN60728-3-1, flat)
Output level	111 dBµV (all QAM (138 x 256 QAM), EN60728-3-1, 12 dB slope @ 1218 MHz)
Input return loss	≥20 dB (-1,5 dB/Oct.)
Attenuator downstream	0...20 dB (0,1 dB steps)
Interstage attenuator downstream	0...20 dB (1 dB steps)
Equalizer downstream	0...15 dB (0,1 dB steps)
Interstage equalizer downstream	0...15 dB (1 dB steps)
RF test points	- 20 dB
Upstream (US)	(optional accessory VX50Bxxxx)
Frequency range upstream	5...65/85/204 MHz
High pass filter switchable	12 MHz
Gain upstream	26 dB
Frequency response upstream	± 0,5 dB
Noise figure upstream	≤ 8,5 dB
Output level	115 dBµV (CLC/TS50083-3-3 (BER ≤1 E-8, MER ≥35 dB), 5...65 MHz (6 x 64 QAM))
Output level	111 dBµV (CLC/TS50083-3-3 (BER ≤1 E-8, MER ≥35 dB), 5...204 MHz (22 x 64 QAM))
NPR (>50 dB) EN60728-3	16 dBµV/Hz (max. Input level (60 MHz load), 22 dB dyn. range)

Technical Data	
NPR (>50 dB) EN60728-3	12 dBµV/Hz (max. input level (200 MHz load), 19 dB dyn. range)
Return loss upstream (in / output)	≥ 20 dB (-1,5 dB/Oct.)
Attenuator upstream input	0...30 dB (1 dB-steps)
Attenuator upstream output	0...30 dB (1 dB-steps)
Equalizer range	0...15 dB (0,5 dB steps)
ICS, US	0/ -6/ < -45 dB
Upstream test point	-20 dB
RF injection point	-20 dB
General data	
RF connectors	PG11/F
Impedance	75 Ω
Supply voltage	180...265 V AC
Power consumption	38,0 W
Remote power current in and outputs	< 8 A
Surge protection power supply	2 kV (1,2/50 µs pulse EN61000-4-5)
Hum modulation @ 8A, f > 15 MHz	> 70 dB
Ambient temperature	-20...+65 °C
Protection class	IP67
EMC	EN 50083-2
Surge protection RF ports	6 kV (1,2/50 µs pulse EN61000-4-5)
NMS / Handset / BT App Functionality	
Downstream	
Monitoring:	control level deviation, attenuator, equalizer, slope settings, pilot level state, pilot frequency, RF power level, 5V/24V supply voltage
Configuration:	input attenuator, interstage attenuator, input equalizer, interstage slope, attenuator output 1, ALSC adjustment, equalizer frequency 1/1,2 GHz
Alarms:	pilot level too high/low, control level deviation

Compact Line HFC amplifier

VX 57 B

Compact Line CATV Amplifier

characteristics

- Compact 1 GHz/1,2 GHz high level CATV amplifier with two active high level outputs
- Remote powered
- All settings (gain, slope etc.) by WISI control unit (OH 41 Handset) or Android app via bluetooth
- Includes interface for NMS functionality: HMS or DOCSIS
- Management functionality according to EN 60728-14 available (ICS setting)
- Diplex filters and splitter / tap modules pluggable
- High level upstream amplifier pluggable
- ALSC module pluggable (VX 58B)
- Additional universal plug in modules

Technical Data	
Down-Stream / DS	
Frequency range downstream	85...1218 MHz (1 GHz/1,2 GHz equalizer switchable)
Gain downstream	2 x 44 dB (± 0,75 dB)
Frequency response	≤ ± 0,5 dB
Noise figure	<6,5 dB @ 1 GHz, <8,0 dB @ 1,2 GHz
Output level	115 dBµV (CENELEC 42 Ch. (CSO/ CTB ≥ 60 dB), flat)
Output level	118 dBµV (CENELEC 42 Ch. (CSO/ CTB ≥ 60 dB), 9 dB slope @ 862 MHz)
Output level	109 dBµV (all QAM (138 x 256 QAM), EN60728-3-1, flat)
Output level	111 dBµV (all QAM (138 x 256 QAM), EN60728-3-1, 12 dB slope @ 1218 MHz)
Input return loss	≥ 20 dB (-1,5 dB/Oct.)
Attenuator downstream	0...20 dB (0,1 dB steps)
Interstage attenuator downstream	0...20 dB (1 dB steps)
Equalizer downstream	0...15 dB (0,1 dB steps)
Interstage equalizer downstream	0...15 dB (1 dB steps)
RF test points	- 20 dB
Upstream (US)	(optional accessory VX50Bxxxx)
Frequency range upstream	5...65/85/204 MHz
High pass filter switchable	12 MHz
Gain upstream	26 dB
Frequency response upstream	± 0,5 dB
Noise figure upstream	≤ 8,5 dB
Output level	115 dBµV (CLC/TS50083-3-3 (BER ≤1 E-8, MER ≥35 dB), 5...65 MHz (6 x 64 QAM))
Output level	111 dBµV (CLC/TS50083-3-3 (BER ≤1 E-8, MER ≥35 dB), 5...204 MHz (22 x 64 QAM))

Technical Data	
NPR (>50 dB) EN60728-3	16 dBµV/Hz (max. Input level (60 MHz load), 22 dB dyn. range)
NPR (>50 dB) EN60728-3	12 dBµV/Hz (max. input level (200 MHz load), 19 dB dyn. range)
Return loss upstream (in / output)	≥ 20 dB (-1,5 dB/Oct.)
Attenuator upstream input	0...30 dB (1 dB-steps)
Attenuator upstream output	0...30 dB (1 dB-steps)
Equalizer range	0...15 dB (0,5 dB steps)
ICS, US	0/ -6/ < -45 dB

Compact Line accessories

XE 51 A

Equalizer module

XE 52 A

Equalizer module

Technical Data		
Frequency range	47...1006 MHz	47...1006 MHz
Equalization	3/9 dB	12/18 dB
Impedance	75 Ω	75 Ω

XE 52 B

Equalizer module 12/18 dB

XE 51 B

Equalizer module 3/9 dB

characteristics

- Suitable for WISI Compact Line Amplifiers
- Supports automatic module detection

Technical Data		
Frequency range	85...1218 MHz	85...1218 MHz
Equalization	12/18 dB	3/9 dB
Impedance	75 Ω	75 Ω
Return loss	>15 dB (Input/Output)	>15 dB (Input/Output)

XM 56 B

Tap 18/1 dB

XM 55 B

Tap 13/1 dB

XM 53 B

TAp 8/2 dB

XM 51 B

Splitter 4/4 dB

characteristics

- Suitable for WISI Compact Line Amplifiers
- Supports automatic module detection

Technical Data				
Frequency range	5...1218 MHz	5...1218 MHz	5...1218 MHz	5...1218 MHz
TAP loss	<19 dB	<13,5 dB	<9 dB	75 Ω
Through loss	<1,4 dB	<1,4 dB	<2 dB	<4,5 dB
Isolation	>28 dB	>28 dB	> 25 dB	≥ 20 dB
Return loss 5...1006 MHz	>18 dB	>18 dB	>18 dB	>18 dB
Return loss 1006...1218 MHz	>16 dB	>16 dB	>16 dB	>16 dB

Compact Line accessories

XE 20 B 0650

Diplexer 65/85 MHz

Technical Data	
Frequency range high-pass	85...1218 MHz
Frequency range low-pass	5...65 MHz
Impedance	75 Ω
Return loss	>20 dB
Rejection	>50 dB

characteristics

- Downstream (DS) compatible up to 1.2 GHz

XE 20 B 0850

Diplexer 85/108 MHz

Technical Data	
Frequency range high-pass	108...1218 MHz
Frequency range low-pass	5...85 MHz
Impedance	75 Ω
Return loss	>20 dB
Rejection	>50 dB

characteristics

- Downstream (DS) compatible up to 1.2 GHz

LB 01

Bluetooth antenna

characteristics

- PG11 gland, for use with WISI Nodes and VX5xB amplifiers

XE 50 B 0650

Diplexer 65/85 MHz

Technical Data	
Frequency range high-pass	85...1218 MHz
Frequency range low-pass	5...65 MHz
Impedance	75 Ω
Return loss	>20 dB
Rejection	>50 dB

characteristics

- Suitable for WISI Compact Line Amplifiers
- Supports automatic module detection

XE 50 B 0850

Diplexer 85/108 MHz

Technical Data	
Frequency range high-pass	108...1218 MHz
Frequency range low-pass	5...85 MHz
Impedance	75 Ω
Return loss	>20 dB
Rejection	>50 dB

characteristics

- Suitable for WISI Compact Line Amplifiers
- Supports automatic module detection

XE 50 B 2040

Diplexfilter 204/258 MHz

Technical Data	
Upstream	
Frequency range low-pass	5...204 MHz
Through loss	<1 dB
Return loss	>20 dB
Rejection	>40 dB
Group delay time	<3 ns/2 MHz
Downstream	
Frequency range high-pass	258...1218 MHz
Through loss	<1 dB
Return loss	>20 dB

ANTENNA

Compact Line accessories

VX 58 B

ALSC Module

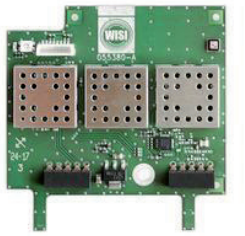

Technical Data	
Frequency range pilot L (low)	45…1002 MHz (50 kHz steps)
Frequency ranges pilot H (high)	45…1002 MHz (50 kHz steps)
Input level range for pilot frequencies	50…90 dBµV
Regulation accuracy @ pilot	≤0,25 dB
Control range	max. ± 0,9 dB (47 MHz)
Max. control range for one pilot regulation (ASC)	470 MHz ± 2,9 dB; 606 MHz ± 3,4 dB; 862 MHz ± 4,0 dB; 1002 MHz ± 4,4 dB; (1218 MHz ± 4,9 dB)
Max. control range for two pilot regulation (ALSC)	47…1218 MHz ± 4,9 dB
Regulation deviation modulated/unmodulated TV carrier	≤ 0,1 dB
General data	
Supply voltage	5,0 V DC
Power consumption max.	<1,3 W
Ambient temperature	-10…+80 °C
Dimensions (width x height x depth)	61 x 64 x 6 mm

characteristics

- Auto Alignment allows the automatic adjustment of the amplifier
- ALSC (Automatic Level and Slope Control) controls permanently the output level and realign settings in case of deviation
- Control via Bluetooth by the WISI HFC Manager application or the handset OH 41
- Two freely selectable measurement channels (pilot carriers) in the range of 45…1002 MHz
- Usage in VX 5xB amplifiers of the WISI Compact Line series
- Pluggable version

VX 50 B 0650

65 MHz return path module

Technical Data	
Upstream (US)	
Frequency range upstream	5…65 MHz
Gain upstream	30 dB (VX52B/53Bxxxx), 26 dB (VX 56B/57Bxxxx)
Frequency response upstream	± 0,5 dB
Output level	114 dBµV (CLC/ TS50083-3-3 (BER ≤1 E-8, MER ≥35 dB), 5…65 MHz (6 x 64 QAM))
Output level	110 dBµV (CLC/ TS50083-3-3 (BER ≤1 E-8, MER ≥35 dB), 5…204 MHz (22 x 64 QAM))
Return loss upstream (in / output)	≥ 20 dB (-1,5 dB/ Oct.)
Equalizer range	0…15 dB (0,5 dB steps)
General data	
Impedance	75 Ω
Power consumption	2,5…3,5 W
Dimensions (width x height x depth)	58 x 60 20 mm

VX 50 B 2040

204 MHz return path module

Technical Data	
Upstream (US)	
Frequency range upstream	5…204 MHz
Gain upstream	30 dB (VX52B/53Bxxxx), 26 dB (VX 56B/57Bxxxx)
Frequency response upstream	± 0,5 dB
Output level	114 dBµV (CLC/ TS50083-3-3 (BER ≤1 E-8, MER ≥35 dB), 5…65 MHz (6 x 64 QAM))
Output level	110 dBµV (CLC/ TS50083-3-3 (BER ≤1 E-8, MER ≥35 dB), 5…204 MHz (22 x 64 QAM))
Return loss upstream (in / output)	≥ 20 dB (-1,5 dB/ Oct.)
Equalizer range	0…15 dB (0,5 dB steps)
General data	
Impedance	75 Ω
Power consumption	2,5…3,5 W
Dimensions (width x height x depth)	58 x 60 x 20 mm

HIPLAN

Compact Line accessories

VT 21

Microreceiver for fiber nodes and VX2x amplifiers

Technical Data	
Frequency range	868,3 MHz
Monitoring-Status LED	Green: 0/6/45 dB, DS on/off, Burst Mode on/off
Bandwidth	200 kHz
Secondary transmission	<10 dBµV
Input level	30...75 dBµV
Data rate	9600 Bps
Interface	RS-232
Supply voltage	6...24 V (<0,4 W @ 24 V / <0,18 W @ 12 V)
Dimensions (width x height x depth)	25 x 24 x 8 mm
Weight	0,02 kg

characteristics

- Monitoring function: DS on/off, Burst Mode on/off, Ingress Detection Switch 0/6/45 dB
- Intelligent integration into the network management system
- FSK based, robust and no return necessary

The VT 21 is a microreceiver for fiber nodes and amplifiers. Manage your network cost efficiently with the VT 21.

VT 51 A

HMS-Transponder

Technical Data	
Downstream	
Frequency range	48...162 MHz
Frequency tuning	fully agile, 100 kHz steps
Impedance	75 Ω
Input level	40...80 dBµV
Return loss	> 12 dB
C/N for BER <10-6	20 dB
Modulation	FSK
Deviation	± 67 kHz
Data format	asynchronous, NRZ
Data rate	38,4 kbit/s
Upstream	
Frequency range	5...21 MHz
Frequency tuning	fully agile, 100 kHz steps
Impedance	75 Ω
Output level	85...105 dBµV (2 dB-steps)
Return loss	> 12 dB
Level accuracy	± 3 dB
Spurious radiation	> 55 dBc
Frequency accuracy	± 10 kHz
Modulation	FSK
Deviation	± 67 kHz
Data format	asynchronous, NRZ
Data rate	38,4 Kbps
General data	
Craft interface for local control	D-Sub 9
Backplane Connector to VX board	2 x 5 Pins
Ambient temperature	-40...+85 °C
Power supply	5...24 V
Power consumption	2 W

characteristics

- For Compact Amplifiers VX 5x(A); LR54(A);LR43(A,C,D)
- Hardware compliant with SCTE HMS physical layer ANSI/SCTE 25-1
- Software compliant with SCTE HMS-MAC layer ANSI/SCTE 25-2
- Update capability over HMS RF layer
- Advanced and customizeable Automatic Channel

HIPER ANA

Multiband amplifier

VS 35 PRO

Programmable filter amplifier

Technical Data	
Downstream	
Inputs	4 pcs.
Frequency range input 1	FM: 88...108 MHz
Frequency range input 2	VHF: 174...240 MHz
Frequency range input 3	UHF: 470...862 MHz
Frequency range input 4	UHF: 470...862 MHz
Gain inputs 1...4	FM: 35 dB; VHF: >60 dB; UHF: >60 dB
Output level	113 dBµV (6 DVB-T Channels); 113 dBµV IMA3 (FM)
Number of filters	15 pcs.
Channel conversion	Yes
Attenuator	0...20 dB
Interstage equalizer (Slope)	0...9 dB
Selectivity	50 dB / 1 MHz
MER	VHF/UHF: 35 dB
Output test point	-30 dB
Connectors	
F-female	6 pcs.
General data	
Operating voltage AC	100...240 V
Power consumption	12 W
Dimensions (width x height x depth)	217 x 165 x 59 mm
Weight	0,8 kg

Packaging Data	
Sales unit	1 pcs.
Dimensions (WxHxD) sales unit	270 x 230 x 70 mm
Packaging volume sales unit	4.35 dm³
Gross weight sales unit	1 kg
Shipping unit	pcs.
Dimensions (WxHxD) shipping unit	270 x 230 x 70 mm
Packaging volume shipping package	4,35

The VS 35 PRO is a programmable terrestrial filter with an integrated amplifier. Four antennas (1x FM, 1x DAB/VHF, 2x UHF) can be connected via four F-connectors. 15 freely selectable channels can be programmed - a number that may be increased up to 50 by extending the channel bandwidth. The high selectivity ensures a high signal quality of the converted channels. All settings are done by the control unit OH 41 (not included in the delivery scope). The LTE 700 / LTE 800 MHz protection is done automatically by the device itself. Moreover, the received terrestrial channels can be relocated to any required frequency, hence the VS 35 PRO is usable as a channel converter.

characteristics

- Filters and amplifies 15 terrestrial channels (number can be increased up to 50 by extending the channel bandwith)
- Completely free assignment of the filters to the desired input
- Very high selectivity of the filters (>50 dB to adjacent channels)
- Integrated AGC (Automatic Gain Control) to compensate level differences at the input
- Level indication of the received channels

Multiband amplifier

VS 50 PRO

Programmable filter amplifier, channel converter

Technical Data	
Downstream	
Inputs	5 pcs.
Frequency range input 1	FM: 88...108 MHz
Frequency range input 2	VHF: 174...240 MHz; UHF: 470...862 MHz
Frequency range input 3	
Frequency range input 4	VHF: 174...240 MHz; UHF: 470...862 MHz
Frequency range input 5	VHF: 174...240 MHz; UHF: 470...862 MHz
Gain input 1	FM: 35 dB
Gain inputs 2...5	VHF: >45 dB; UHF: >55 dB
Output level	118 dBµV (6 DVB-T channels); 113 dBµV IMA3 (FM)
Attenuator	0...20 dB
Interstage equalizer (Slope)	0...9 dB
AGC control range	0...20 dB
Selectivity	50 dB / 1 MHz
MER	VHF/UHF: 35 dB
Output test point	-20 dB
Connectors	
F-female	7 pcs.
General data	
Operating voltage DC	12 V DC
Power consumption	20 W
Dimensions (width x height x depth)	232 x 166 x 55 mm
Weight	0,8 kg

Packaging Data	
Sales unit	1 pcs.
Dimensions (WxHxD) sales unit	280 x 200 x 100 mm
Packaging volume sales unit	dm^3
Gross weight sales unit	98 kg
Shipping unit	pcs.
Dimensions (WxHxD) shipping unit	mm
Packaging volume shipping package	

The VS 50 PRO is a programmable terrestrial filter with an integrated amplifier. Four VHF/UHF antennas can be connected via four F connectors, and one additional F connector is available for insertion of FM. Also, 32 freely selectable channels can be programmed - a number that may be doubled to 64 by extending the channel bandwidth. Moreover, the received terrestrial channels can be relocated to any required frequency, hence the VS 50 PRO is usable as a channel converter, to relocate UHF channels to a lower frequency range. The high selectivity ensures a high signal quality of the converted channels. All settings are done by the control unit OH 41 (not included in the delivery scope).

characteristics

- 32 freely selectable channels (max. 64 by increasing the channel bandwidth)
- Very high selectivity of the filters
- Integrated AGC (Automatic Gain Control) to compensate level differences at the input
- Very high output level of 118 dBµV
- Level indication of the received channels

Block diagrams

VX 81 0S, VX 83 0S

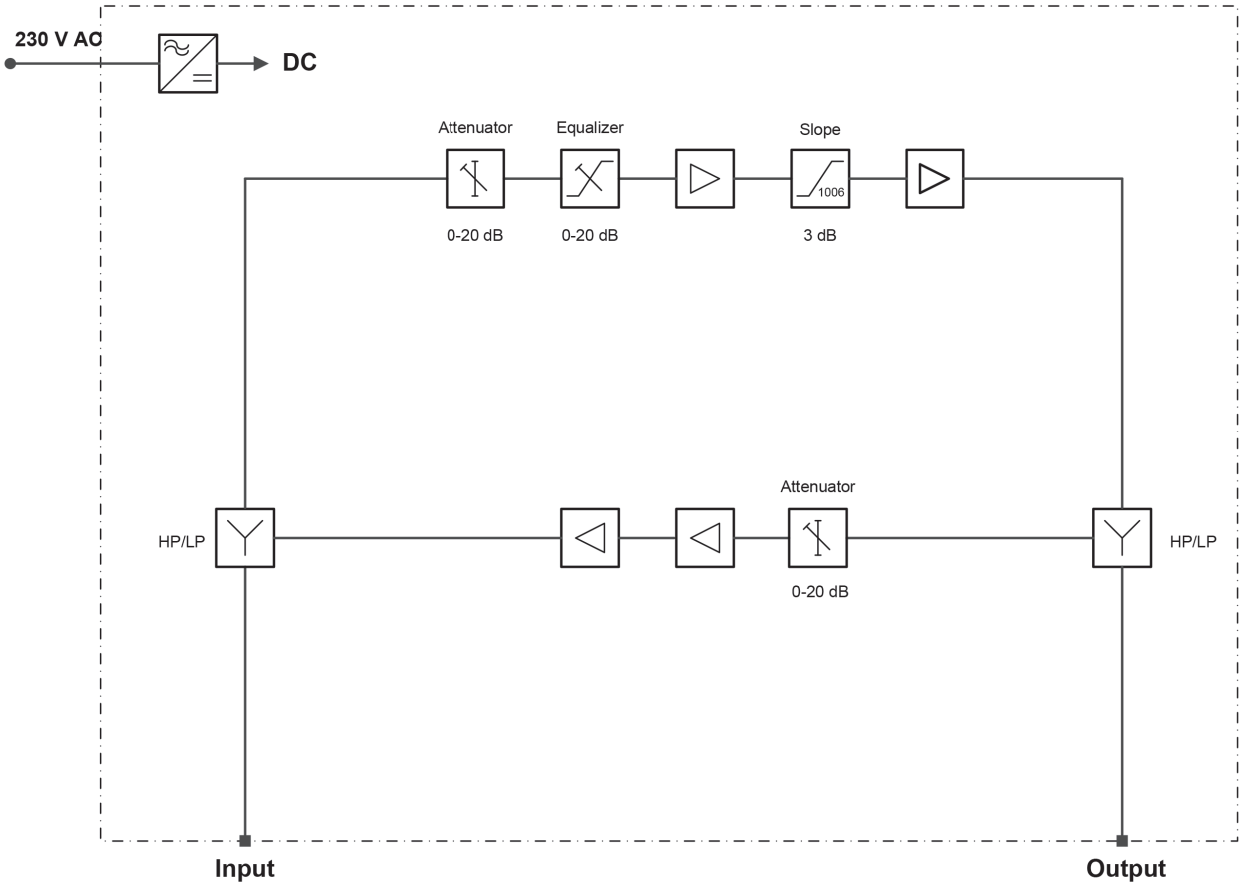

VX 86, VX 87

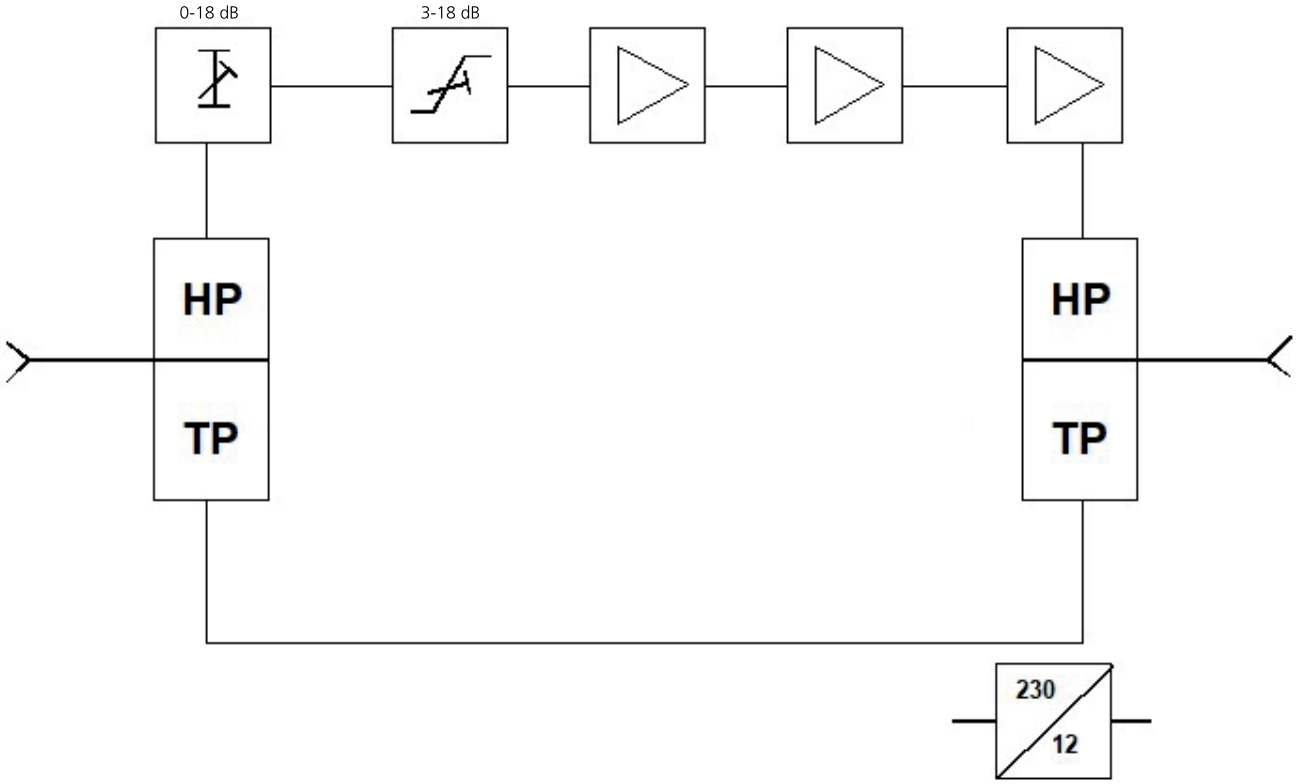

Block diagrams

VX 67 B

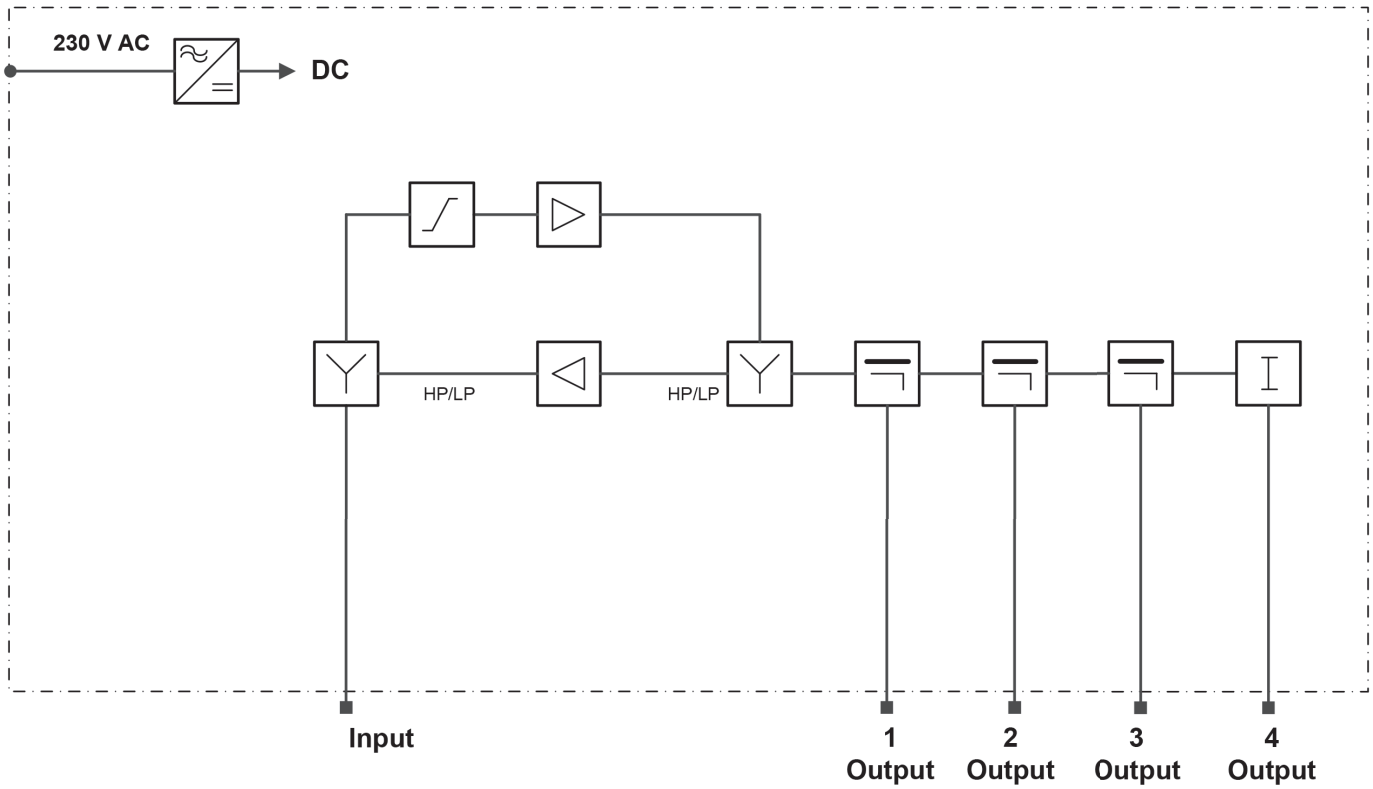

VX 12 K4432

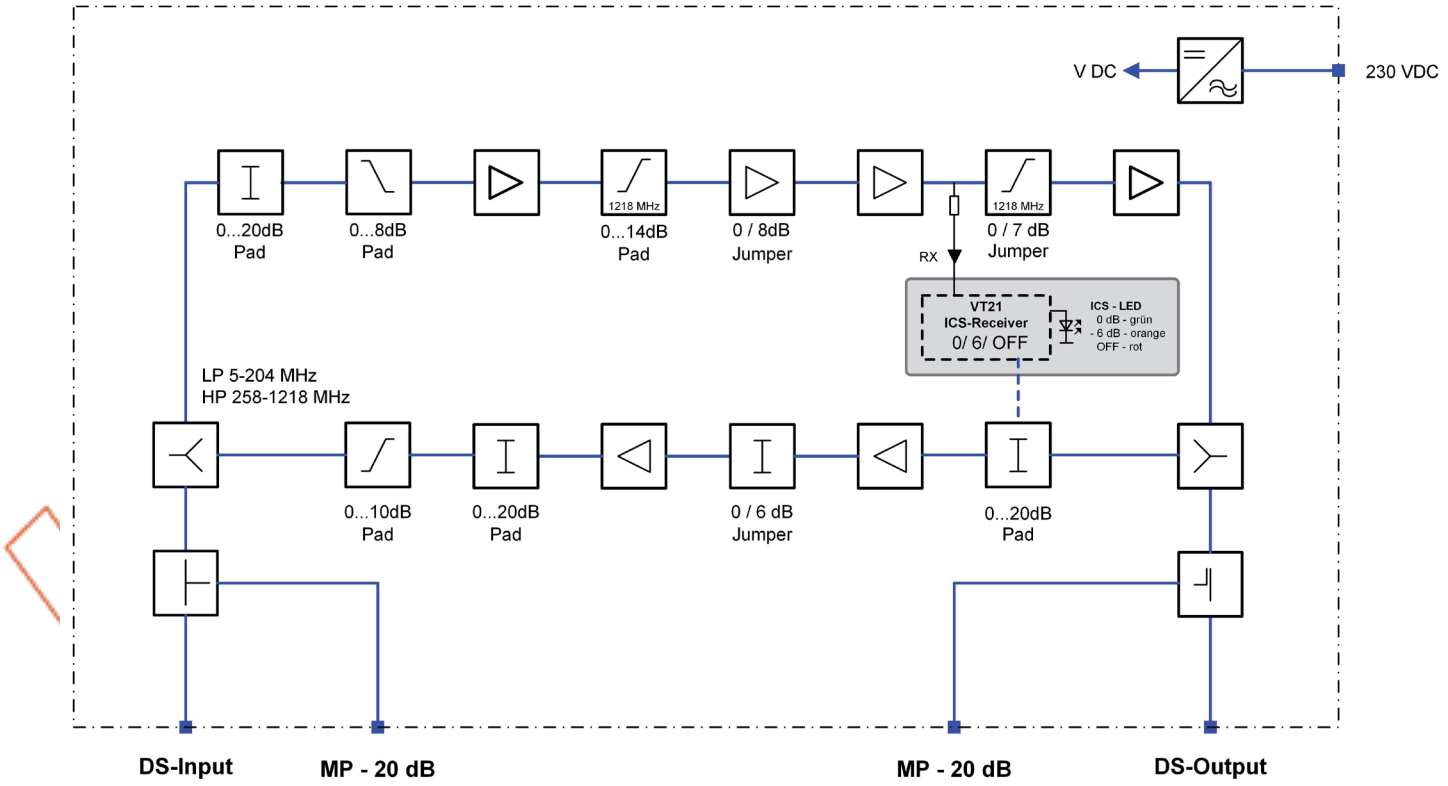

Block diagrams

VX 45 D 3830

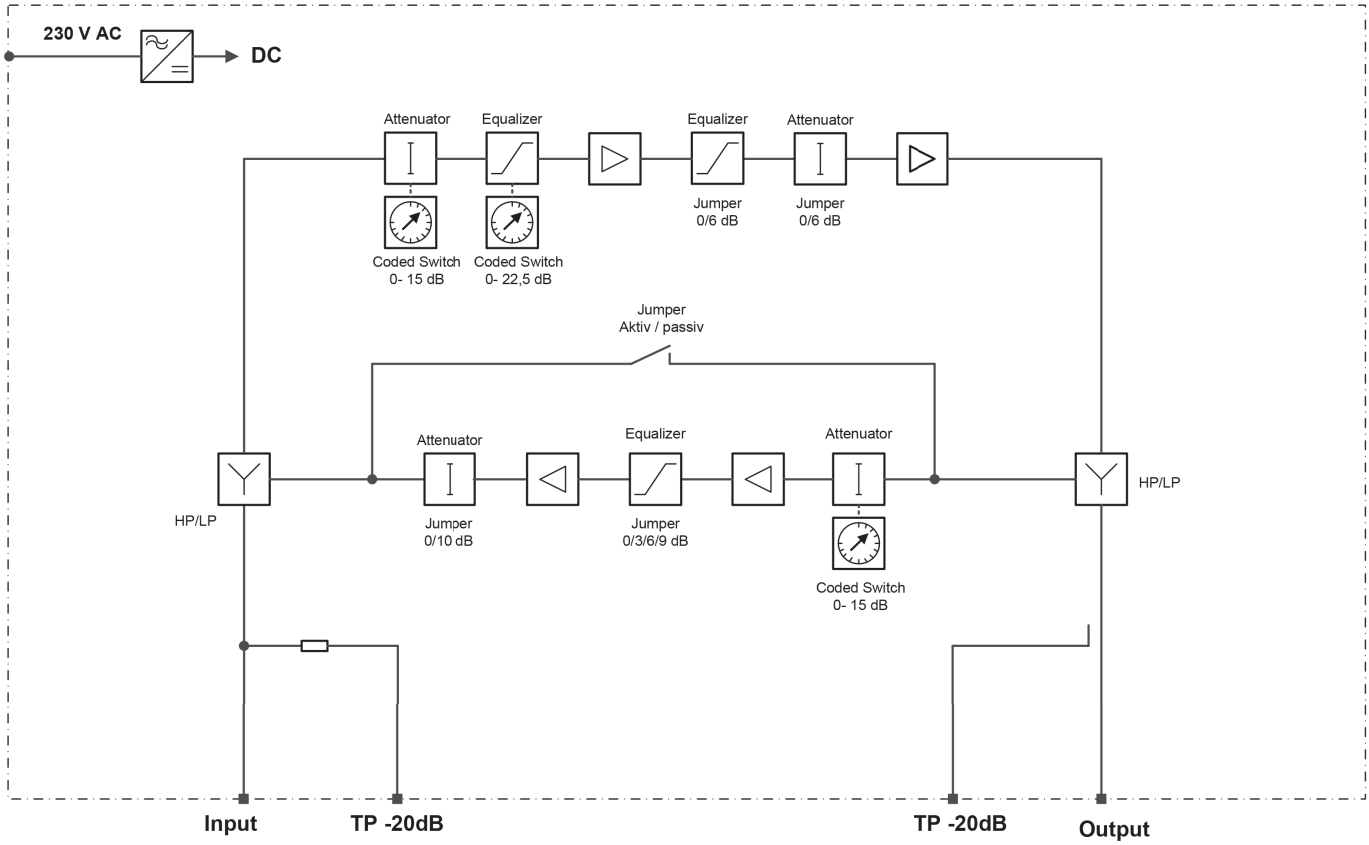

VX 45 E

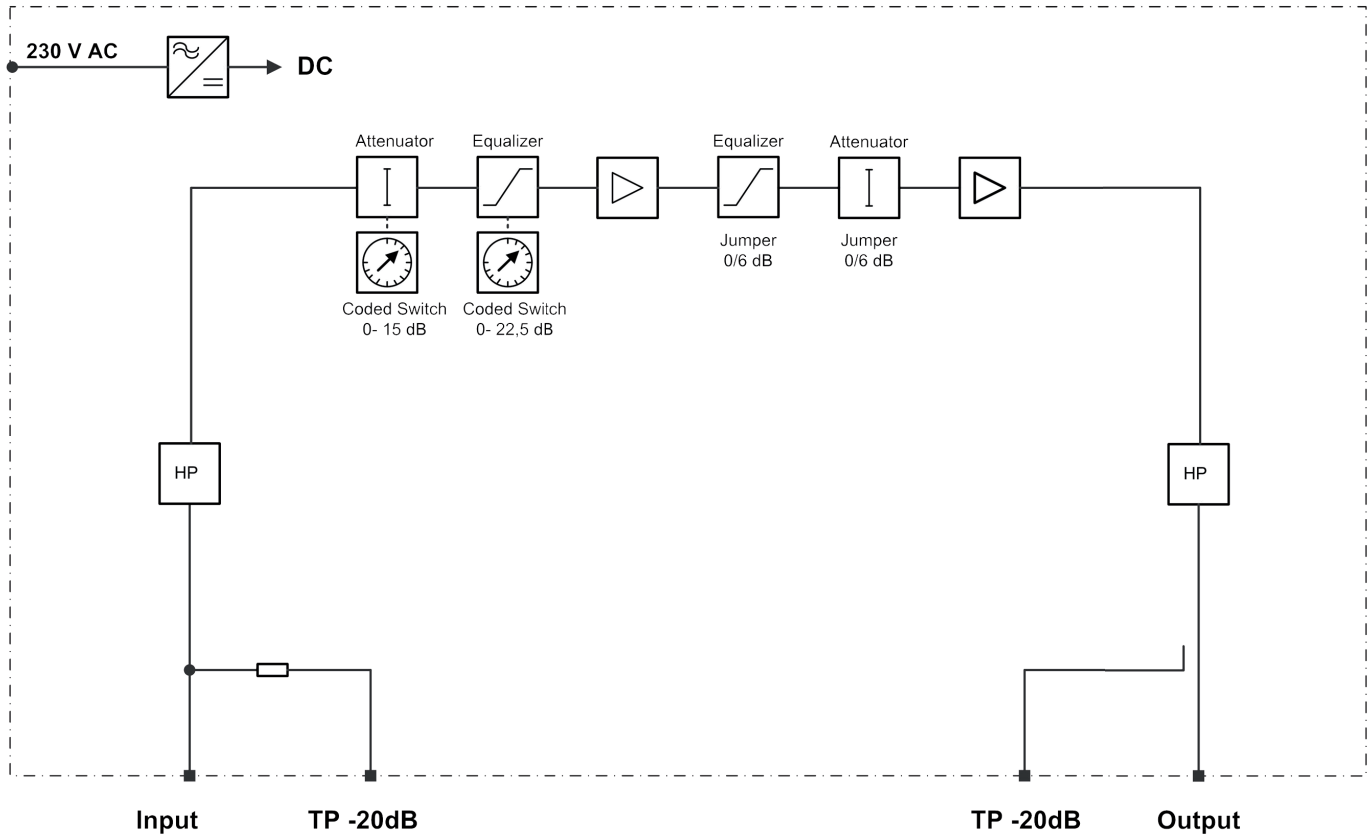

Block diagrams

VX 26/29 Bx xxA

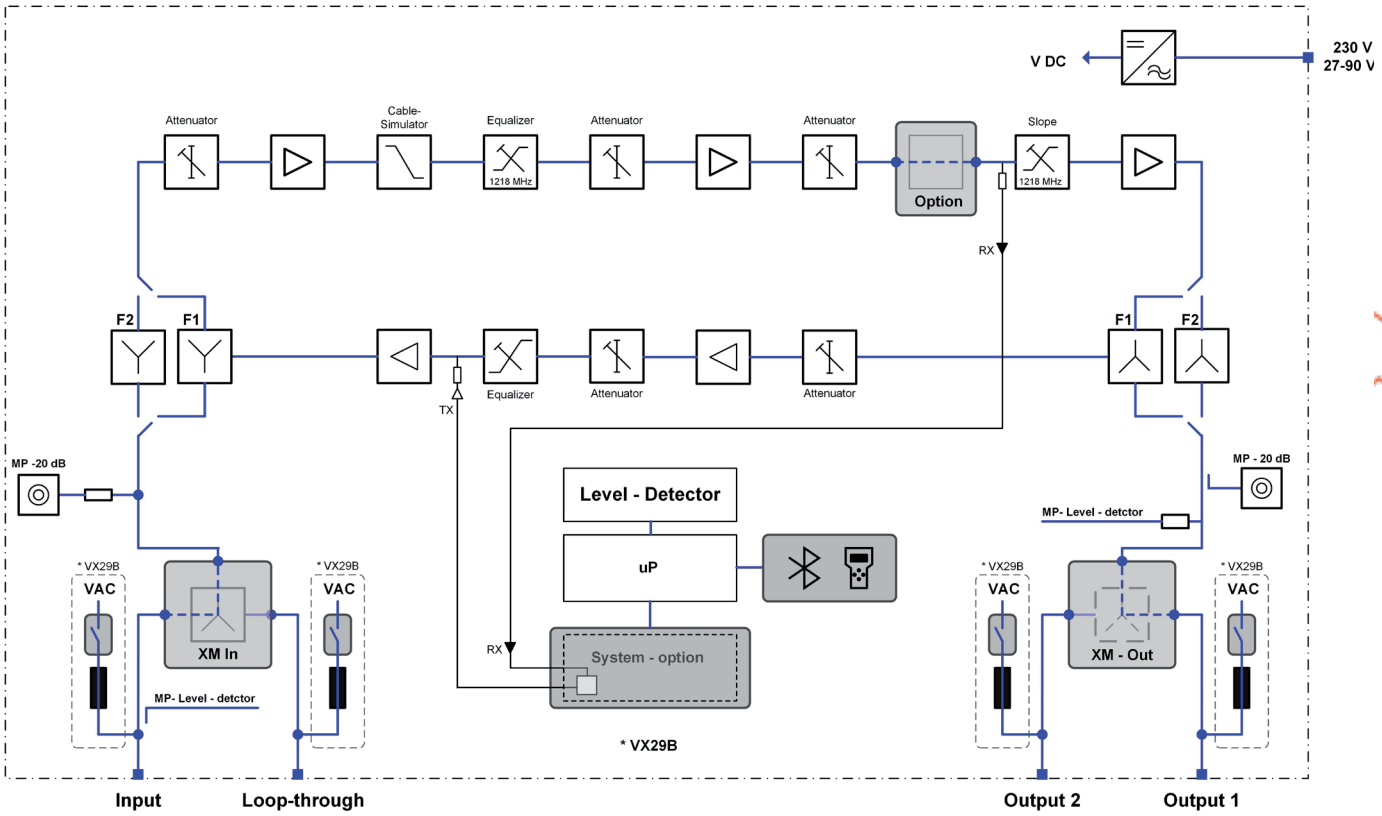

VX 26 H, VX 29 H

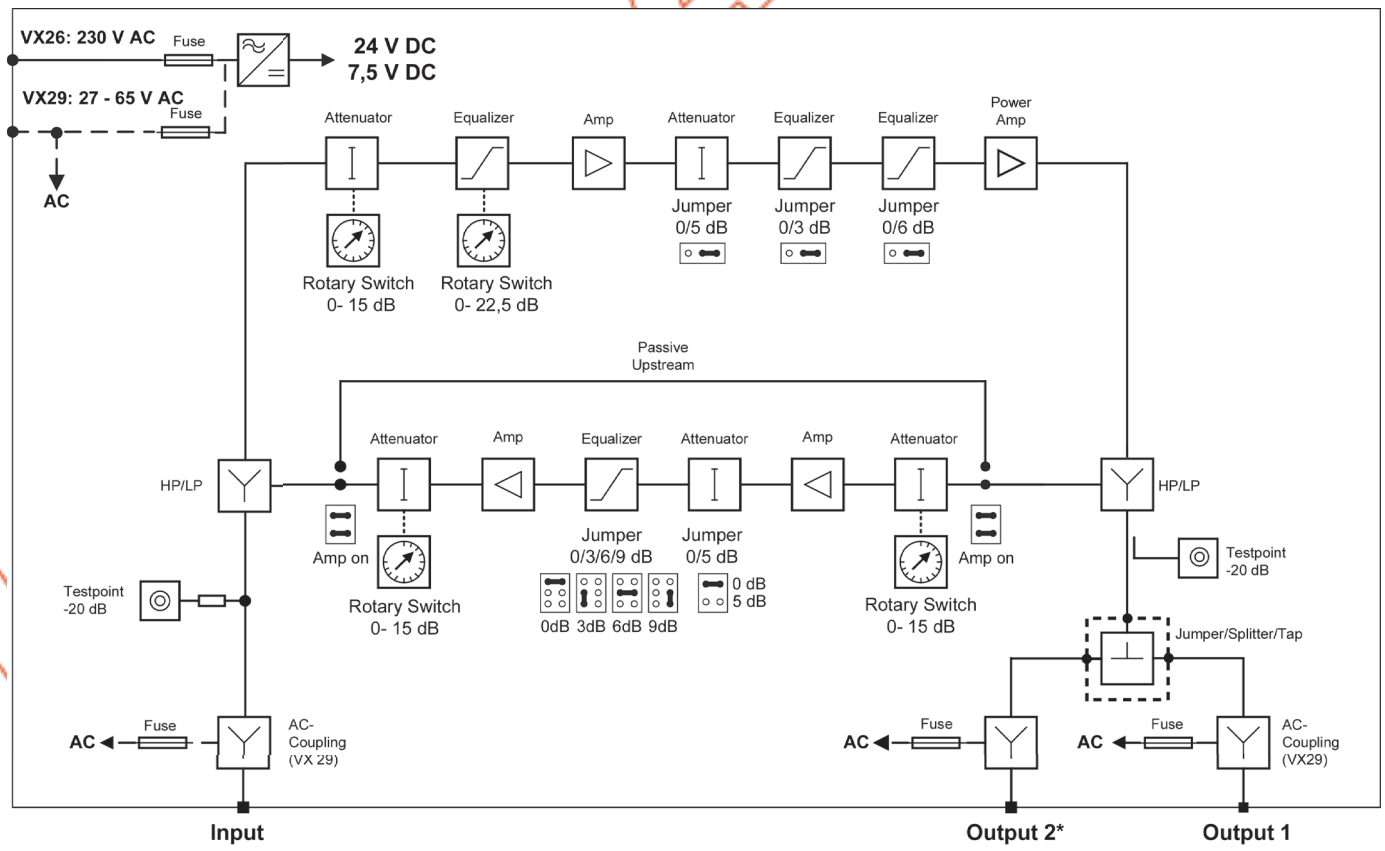

Block diagrams

VX 26 M1

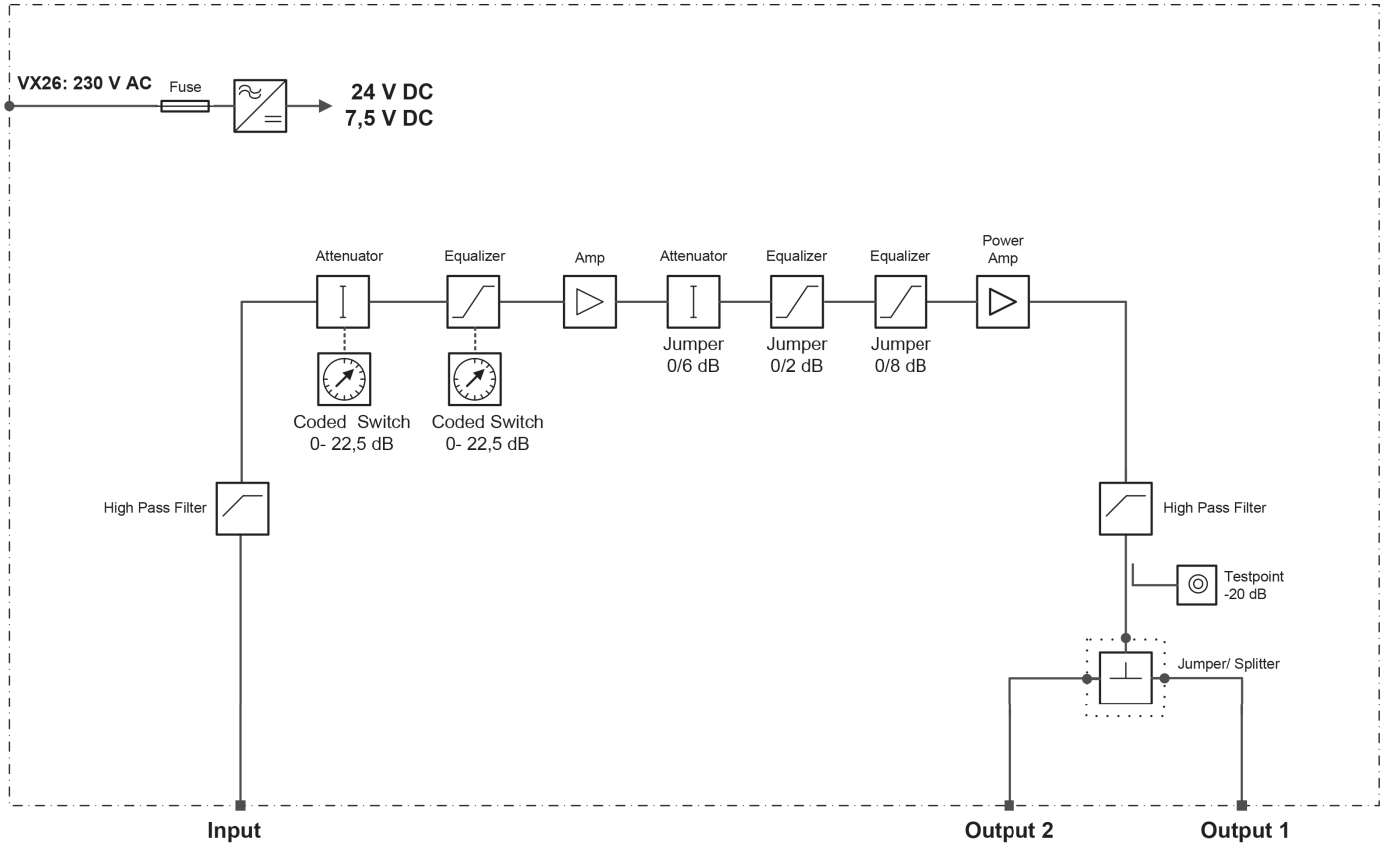

VX 52 B, VX 53 B

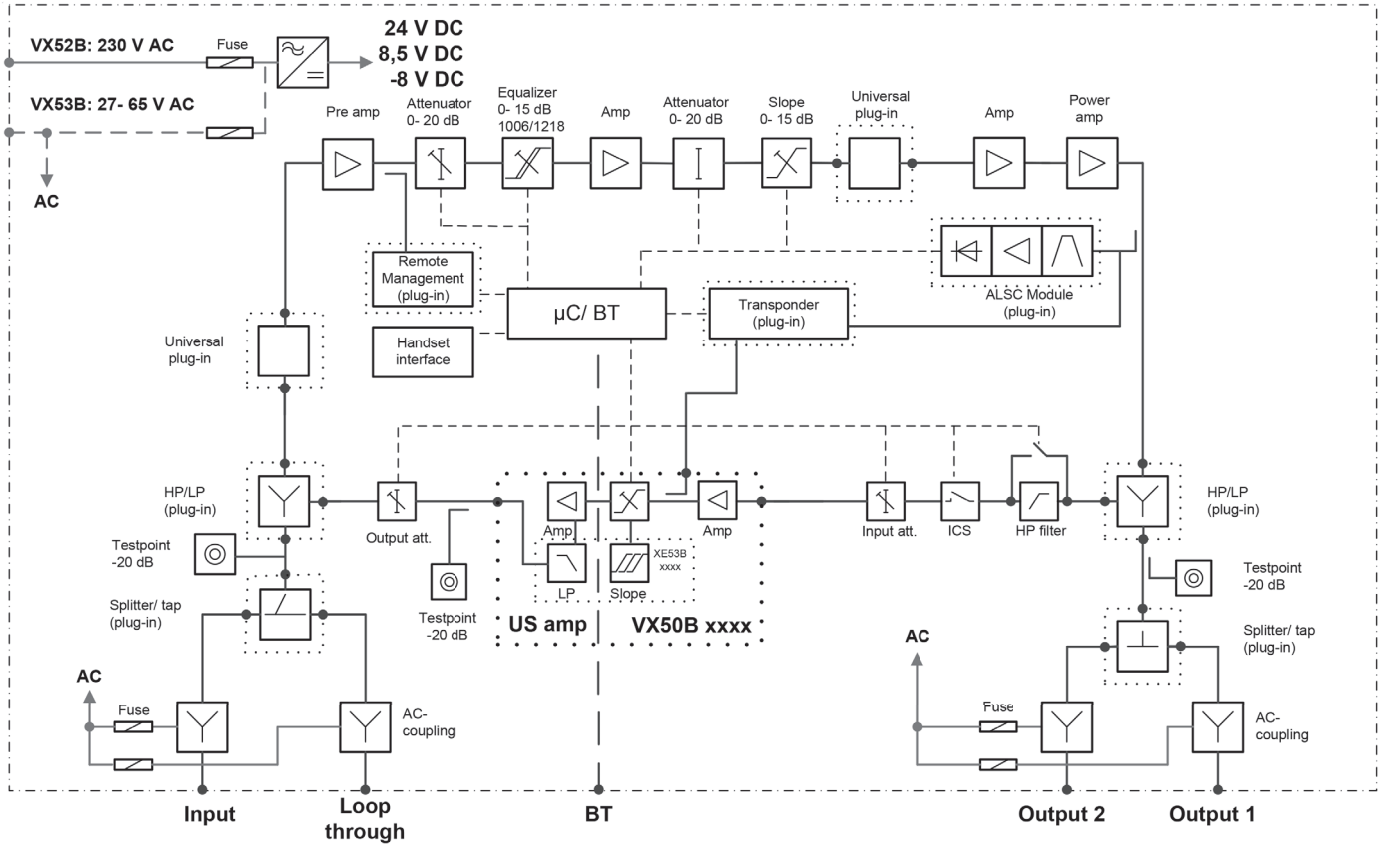

Block diagrams

VX 56 B, VX 57 B

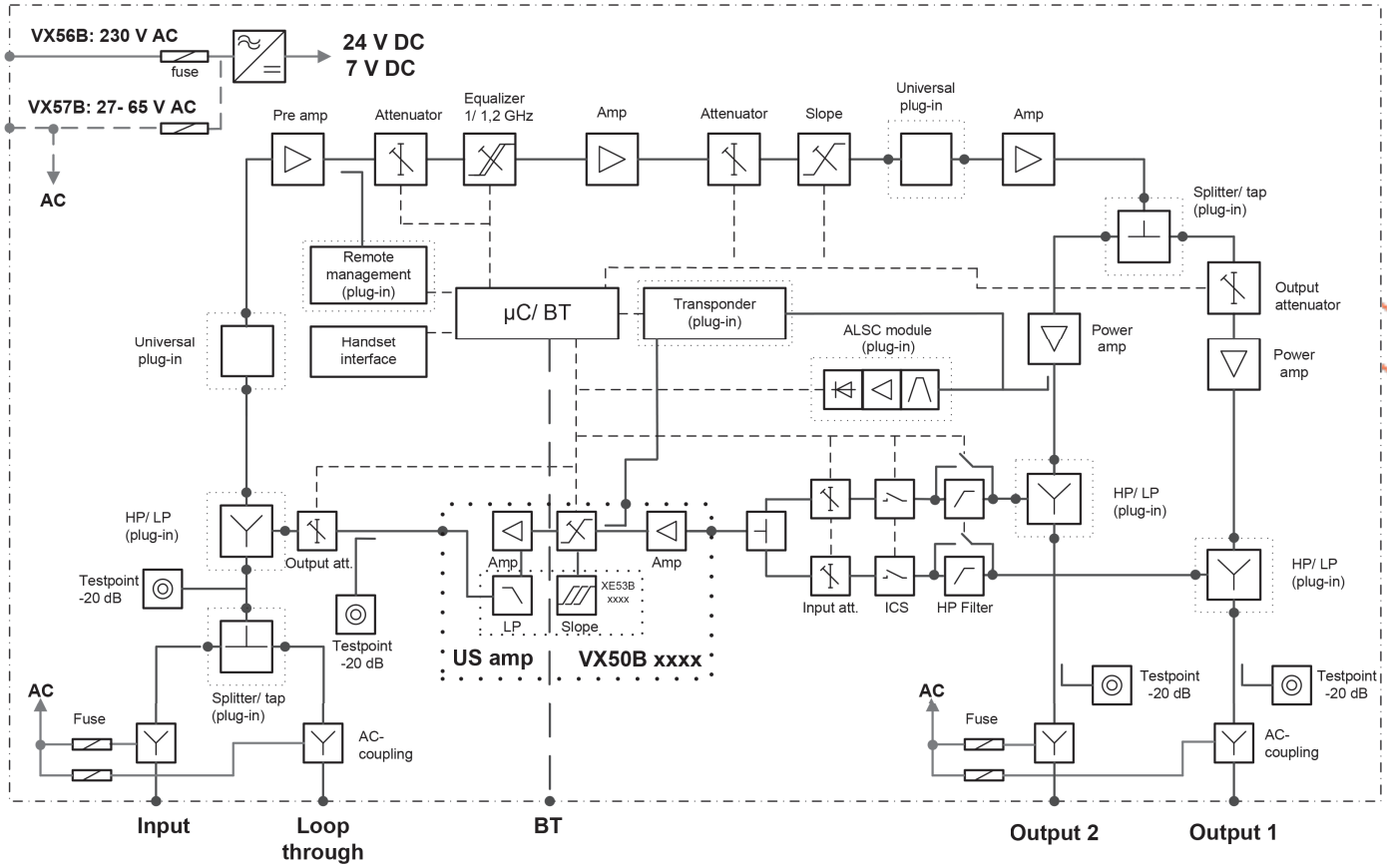

HIPER AU

Space for your notes

HIPER ANTENA

HIPER ANTENA

Space for your notes

HIPER ANTENA

HIPER ANTENA

wisigroup.com

PROSE Main Catalog 11/2022 085122

All rights reserved. WISI cannot be held liable for any printing error. 2023/02

HIPER ANTE

Always up to date

The current versions of all WISI product brochures can be found here!
wisigroup.com/catalogues-and-brochures

WISI Communications GmbH & Co. KG
Empfangs- und Verteiltechnik
Wilhelm-Sihn-Strasse 5-7 · 75223 Niefern-Oeschelbronn, Germany
Telefon +49 72 33 / 66 0 · Telefax +49 72 33 / 66 309 · info@wisi.de

Your specialty retailer: